DEPARTMENT OF THE ARMY TECHNICAL MANUAL

DEPARTMENT OF THE AIR FORCE TECHNICAL ORDER

TM 11-289

T.O. 16-35RT66-5

RECEIVER-TRANSMITTERS RT-66/GRC, RT-67/GRC AND RT-68/GRC

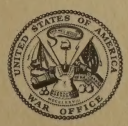

DEPARTMENTS OF THE ARMY AND THE AIR FORCE

DECEMBER 1953

TECHNICAL MANUAL
No. 11–289
TECHNICAL ORDER
No. 16–35RT66–5

DEPARTMENTS OF THE ARMY AND
THE AIR FORCE
WASHINGTON 25, D. C., *3 December 1953*

RECEIVER-TRANSMITTERS

RT–66/GRC, RT–67/GRC AND RT–68/GRC

		Paragraphs	*Page*
CHAPTER 1.	Introduction		
Section I.	General	1, 2	7
II.	Description and data	3–10	8
CHAPTER 2.	THEORY OF RECEIVER-TRANSMITTER	11–46	21
CHAPTER 3.	FIELD MAINTENANCE INSTRUCTIONS		
Section I.	Preventive Maintenance	47–50	100
II.	Troubleshooting at field maintenance level	51–64	102
III.	Repairs	65–69	142
IV.	Lubrication and weatherproofing	70–72	150
V.	Alinement procedures	73–76	150
VI.	Final testing	77–84	159
CHAPTER 4.	SHIPMENT AND LIMITED STORAGE AND DEMOLITION TO PREVENT ENEMY USE	85, 86	164
APPENDIX I.	REFERENCES		165
II.	IDENTIFICATION TABLE OF PARTS		169
INDEX			238

*This manual supersedes TM 11–289, 19 March 1951.

WARNING

HIGH VOLTAGE

is used in the operation of
this equipment.

DEATH ON CONTACT

may result if operating personnel fail
to observe safety precautions.

ARTIFICIAL RESPIRATION

GENERAL PRINCIPLES

1. Seconds count! Begin at once! Don't take time to move the victim unless you must. Don't loosen clothes, apply stimulants or try to warm the victim. Start resuscitation! Get air in the lungs! You may save a life!

2. Place the victim's body in a prone position, so that any fluids will drain from the respiratory passages. The head should be extended and turned sideward *never flexed forward;* the chin shouldn't sag, since obstruction of the respiratory passages may occur.

3. Remove any froth or debris from the mouth with your fingers. Draw the victim's tongue forward.

4. Begin artificial respiration. Continue it rhythmically and without any interruption until natural breathing starts or the victim is pronounced dead. Try to keep the rhythm smooth. Split-second timing is not absolutely essential.

5. When the victim starts breathing, or when additional help is available loosen the clothing; remove it, if it's wet; keep the victim warm. Shock should receive adequate attention. Don't interrupt the rhythmical artificial technique for these measures. Do them only when you have help or when natural breathing has started.

6. When the victim is breathing, adjust your timing to assist him. Don't fight his efforts to breathe. Synchronize your efforts with his. After resuscitation, keep him lying down until seen by a physician or until recovery seems certain.

7. Don't wait for mechanical resuscitation! If an approved model is available, use it, but, since mechanical resuscitators are only slightly more effective than properly performed "push-pull" manual technique, *never* delay manual resuscitation for it.

BACK-PRESSURE ARM LIFT METHOD

1. *Position of Victim.* Place the victim in the prone (face-down) position. Bend his elbows; place one hand upon the other. Turn his face to one side, placing his cheek upon his hands.

2. *Position of Operator.* Kneel on your left or right knee, at the victim's head, facing him. Your knee should be at the side of the victim's head close to his forearm, your foot should be near his elbow. Kneel on both knees if you find it more comfortable, with one knee on each side of the head. Place your hands on the flat of the victim's back so that their heels are just below the lower tip of his shoulder blades. With the tip of your thumbs touching spread your fingers downward and outward. (See A)

3. *Compression Phase.* Rock forward until your arms are approximately vertical and allow the weight of the upper part of your body to exert a slow, steady, even, downward pressure upon your hands. This forces air out of the lungs. Keep your elbows straight and press almost directly downward on the back. (See B)

4. *Expansion Phase.* Release the pressure, avoid any finish thrust, and commence to rock backward slowly. Place your arms upon the victim's arms just above the elbows, and draw his arms upward and toward you. Apply just enough lift to feel resistance and tension at the victim's shoulders.

Don't bend your elbows. As you rock backward, the victim's arms will be drawn toward you. (The arm lift expands the chest by pulling on the chest muscles, arching the back and relieving the weight on the chest.) Drop the arms gently to the ground or floor. This completes the cycle. (See C and D). Now, repeat the cycle.

5. *Cycle Timing and Rhythm.* Repeat the cycle 10 to 12 times per minute. Use a steady uniform rate of Press, Release, Lift, Release. Longer counts of about equal length should be given to the "Press" and "Lift" steps of the compression and expansion phases. Make the "Release" periods of minimum duration.

6. *Changing Position or Operator.*

(*a*) Remember that you can use either or both knees or can shift knees during the procedure, provided you don't break the rhythm. Observe how you rock forward with the back-pressure and backward with the arm-lift. The rocking motion helps to sustain the rhythm and adds to the ease of operation.

(*b*) If you tire and another person is available, you can "take turns." Be careful not to break the rhythm in changing. Move to one side and let your replacement come in from the other side. Your replacement begins the "Press-Release" after one of the "Lift-Release" phases, as you move away.

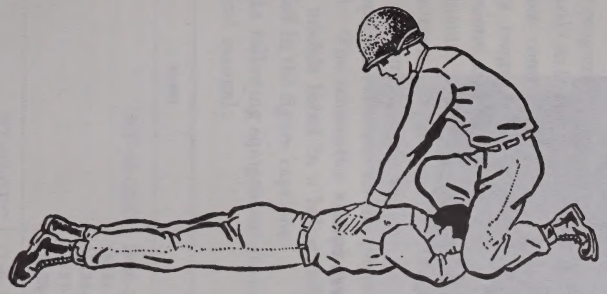

A Position of operator and victim

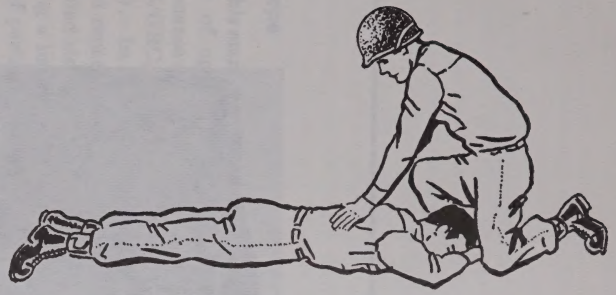

B Compression phase

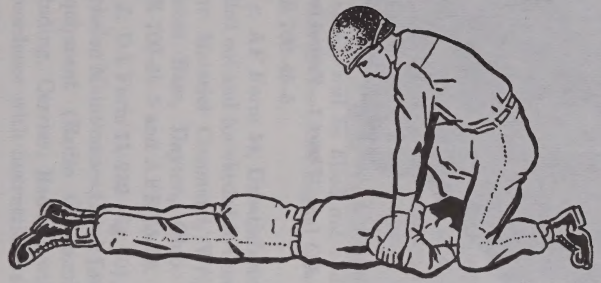

C Expansion phase (arm lift)

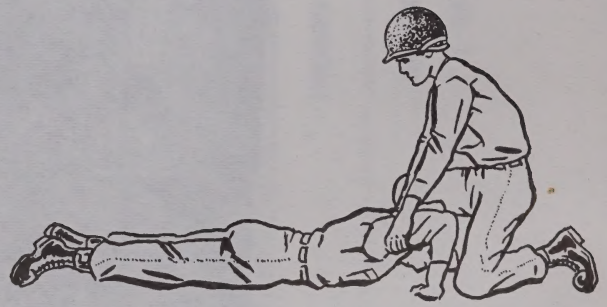

D Expansion phase (arm release)

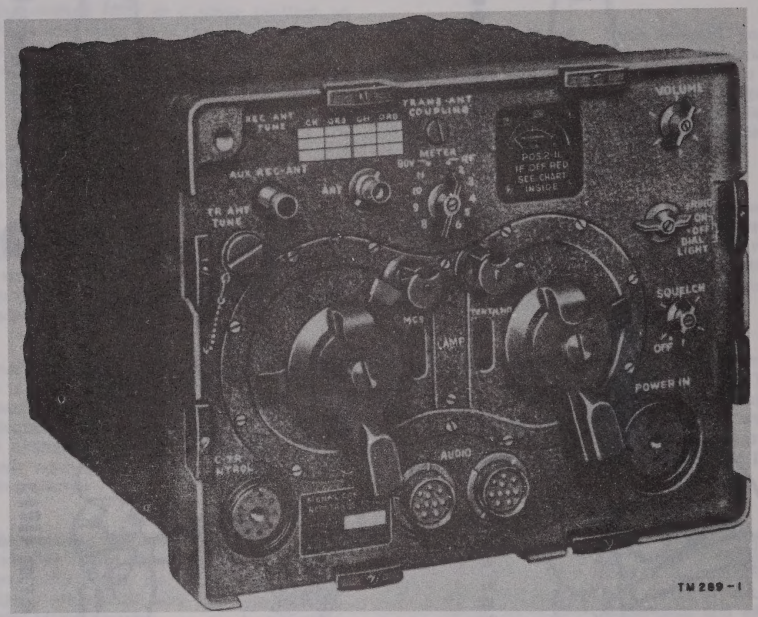

Figure 1. Typical receiver-transmitter, overall view.

CHAPTER 1

INTRODUCTION

Section I.—GENERAL

1. Scope

a. This manual contains a description, a detailed theory of operation, and instructions for field maintenance and repair of Receiver-Transmitters RT–66/GRC, RT–67/GRC, and RT–68/GRC (fig. 1). In addition, a chapter on the disassembly and repacking of the equipment for shipment or limited storage is included. Two appendixes, covering a list of references and an identification table of parts are provided.

b. Receiver-Transmitters RT–66/GRC, RT–67/GRC, and RT–68/GRC are all similar in structure, function, detailed circuit, and mechanical arrangement. They differ from each other primarily in their operating frequency ranges and in those components which determine the frequency ranges. Unless otherwise specified, the discussions in this manual apply to all three equipments, which are referred to as receiver-transmitters. Where specific differences exist between the units, these differences are described with specific reference to the particular unit involved. The schematics and photographs apply to all models listed in *c* below unless otherwise specified in the figure captions.

c. The following equipments are covered in this technical manual:

Model	Order No.
RT–66/GRC	1759–Phila–51. 18651–Phila–49. 21434–Phila–50. 32137–Phila–51. 32138–Phila–51.
RT–67/GRC	1759–Phila –51. 16831–Phila–51.
RT–67/GRC	18651–Phila–49. 32111–Phila–51.
RT–68/GRC	1759–Phila–51. 16817–Phila–51. 16821–Phila–51. 18651–Phila–49. 32114–Phila–51. 32127–Phila–51.

2. Forms and Records

The following forms will be used for reporting unsatisfactory conditions of the Army materiel and equipment and in performing preventive maintenance.

a. DD Form 6, Report of Damaged or Improper Shipment, will be filled out and forwarded as prescribed in SR 745–45–5 (Army), Navy Shipping Guide, Article 1850–4, and AFR 71–4 (Air Force).

b. DA Form 468, Unsatisfactory Equipment Report, will be filled out and forwarded to the Office of the Chief Signal Officer as prescribed in SR 700–45–5.

c. AF Form 54, Unsatisfactory Report, will be filled out and forwarded to Commanding General, Air Materiel Command, Wright-Patterson Air Force Base, Dayton, Ohio, as prescribed in SR 700–45–5 and AFR 65–26.

d. DA Form 11–239 (fig. 60), Second and Third Echelon Maintenance Check List for Signal Corps Equipment (Radio Communication, Direction Finding, Carrier, Radar), will be prepared in accordance with instructions on the back of the form.

e. Use other forms and records as authorized.

3. Purpose and Use

a. Receiver-Transmitters RT–66/GRC, R8–67/GRC, and RT–68/GRC (fig. 1) are compact, lightweight radio sets (without power supply and accessory components) designed for the transmission and reception of f-m (frequency-modulated) signals. The sets are arranged for use in either vehicular, semifixed, or portable installations. When suitably powered, and equipped with an antenna and a microphone and a headset (or a handset), each receiver-transmitter provides two-way communication with smaller vehicular, ground, or portable equipments.

b. The frequency coverage of the receiver-transmitters is indicated in the frequency spectrum chart (fig. 2). An overlap of .9 mc (megacycle) is provided between the bands covered by Receiver-Transmitters RT–66/GRC and RT–67/GRC. Similarly, a .9-mc overlap exists between the bands covered by Receiver-Transmitters RT–67/GRC and RT–68/GRC. The purpose of this overlap is to permit establishing liasion between sets operating in different tactical units. For comparison, the chart also includes the frequency coverage of other radio equipments with which Receiver-Transmitters RT–66/GRC, RT–67/GRC, and RT–68/GRC may be associated in a working net. The chart shows that a considerable overlap exists between Receiver-Transmitter RT–68/GRC and Receiver-Transmitter RT–70/GRC. Each receiver-transmitter may be tuned quickly and accurately in 100-kc (kilocycle) steps, to any one of the detent channels into which its operating band is divided. Alternatively, continuously variable tuning of the entire band is possible. Also, provision is made for presetting two of the detented channels by means of the mechanisms on the tuning controls.

c. Basically, the communication circuit provided by the receiver-transmitters is of the single-frequency, push-to-talk type (fig. 3). The term single-frequency means that the receiver and transmitter circuits are gang-tuned to the same frequency. The term push-to-talk means that normally the equipment is in the standby or receiving condition and that operation of the push-to-talk button on an associated carbon microphone (or of a switch on an associated control box) disables the receiver and turns on the transmitter. Thus, a conversation can proceed in only one direction at a time.

d. Arrangements are provided to permit the receiver-transmitter to be used as a part of a relay, a repeater, or a retransmission station. The three terms, relay, repeater, and retransmission station, are used synonymously to signify an installation in which the audio output of the receiver or the receiver portion of a receiver-transmitter is linked to the audio input of another transmitter for the purpose of retransmitting a message. The technical characteristics of the receiver-transmitters are such that it is also possible to use them in a radio link to extend wire circuits such as telephone, telegraph, or facsimile circuits, over terrain which makes the laying of telephone wires impossible or impracticable.

e. Provisions are included for the transmission of a ringing or calling tone for the purpose of notifying the operator at the receiving end of an incoming message. This is used when the radio is part of a wire-radio circuit using this type of ringing. The ringing or calling tone is analogous to similar provisions in conventional telephone communication.

f. Control of transmission and reception may be accomplished from the panel directly or by means of suitable control boxes from various local positions. Alternatively, remote control of these equipment functions is possible. Ringing through the transmitter, and receiver-transmitter tuning, are panel controlled only. In some installations, provisions are made for adjustment of volume from the remote control position.

g. The receiver-transmitter is essentially a receiver circuit and a transmitter circuit in a common box without a power supply, microphone, headset, handset, antenna, suitable connectors, mountings, and hardware; therefore, these accessory components and materials are required to place the equipment in operation. These components and suitable control boxes are supplied separately as required for a particular system installation in which the receiver-transmitter is to be used. A detailed listing of the additional components required to place the receiver-transmitter into operation is given in paragraph 8. The manner in which the receiver-transmitter and the additional components are associated with each other to form a working installation is described briefly for the

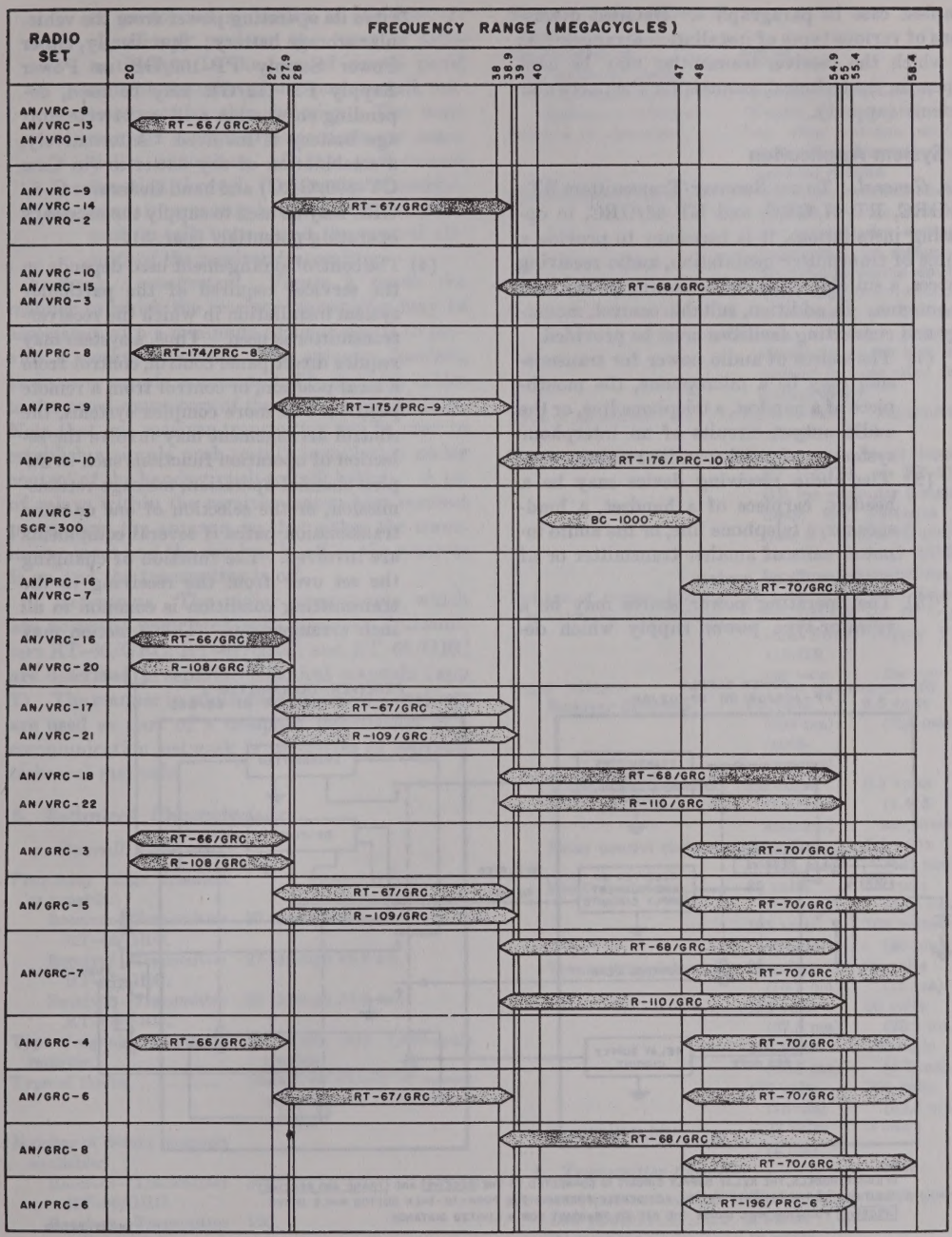

Figure 2. Frequency spectrum chart.

simplest case in paragraph 4. Detailed discussions of various types of installation arrangements in which the receiver-transmitter may be used appear in the technical manuals for the particular systems (app. I).

4. System Application

a. General. To use Receiver-Transmitters RT–66/GRC, RT–67/GRC, and RT–68/GRC, in operating installations, it is necessary to provide a source of transmitter modulation, audio receiving devices, a suitable source of operating power, and an antenna. In addition, suitable control, mounting, and connecting facilities must be provided.

(1) The source of audio power for transmission may be a microphone, the mouthpiece of a handset, a telephone line, or the audio output circuits of an interphone system or of another radio receiver.

(2) The audio receiving device may be a headset, earpiece of a handset, a loudspeaker, a telephone line, or the audio input circuits of another transmitter or of an interphone system.

(3) The operating power source may be a vibrator-type power supply which derives its operating power from the vehicular storage battery. Specifically, either Power Supply PP–109/GR or Power Supply PP–112/GR may be used, depending on whether a 12- or 24-vote storage battery is involved. Alternatively, a combination of dry batteries (in Case CY–590/GRC) and hand Generator G–8/GRC may be used to supply the necessary operating potentials (par. 5).

(4) The control arrangement used depends on the services required of the particular system installation in which the receiver-transmitter is used. Thus, a system may require direct panel control, control from a local position, or control from a remote position. In more complex systems, the control arrangement may involve the selection of operation functions such as duplex channel operation, message retransmission, or the selection of one or more transmission paths if several equipments are involved. The function of changing the set over from the receiving to the transmitting condition is common to all such arrangements. This function may

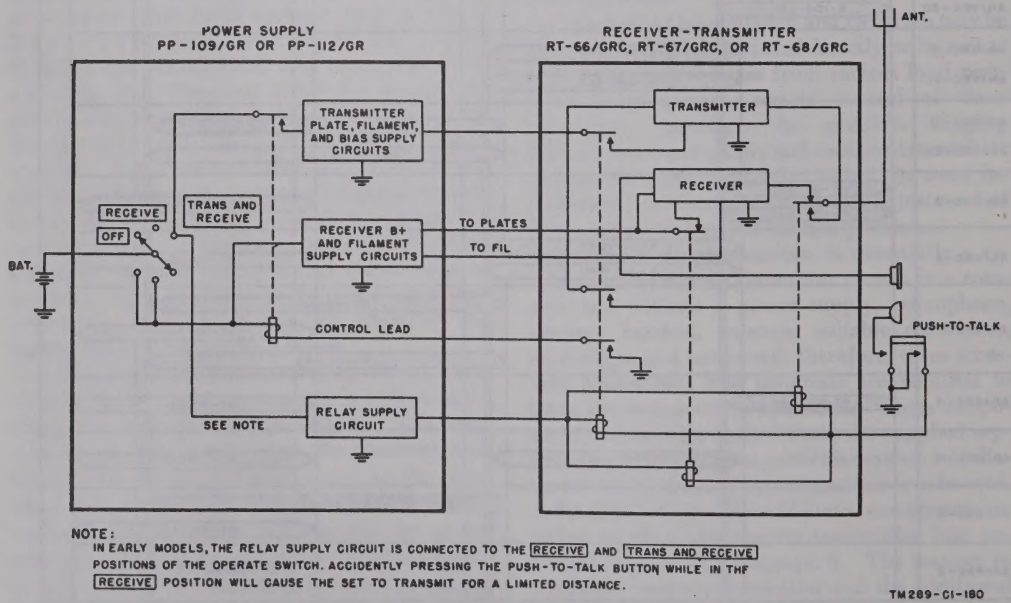
POWER SUPPLY
PP-109/GR OR PP-112/GR
RECEIVER-TRANSMITTER
RT-66/GRC, RT-67/GRC, OR RT-68/GRC
ANT.
TRANSMITTER PLATE, FILAMENT, AND BIAS SUPPLY CIRCUITS
TRANSMITTER
RECEIVER
RECEIVE
OFF
TRANS AND RECEIVE
RECEIVER B+ AND FILAMENT SUPPLY CIRCUITS
TO PLATES
TO FIL
BAT.
CONTROL LEAD
PUSH-TO-TALK
SEE NOTE
RELAY SUPPLY CIRCUIT
NOTE:
IN EARLY MODELS, THE RELAY SUPPLY CIRCUIT IS CONNECTED TO THE RECEIVE AND TRANS AND RECEIVE POSITIONS OF THE OPERATE SWITCH. ACCIDENTLY PRESSING THE PUSH-TO-TALK BUTTON WHILE IN THE RECEIVE POSITION WILL CAUSE THE SET TO TRANSMIT FOR A LIMITED DISTANCE.
TM 289-CI-180

Figure 3. Application of receiver-transmitters RT–66/GRC, RT–67/GRC, and RT–68/GRC in radio sets AN/VRC–8, AN/VRC–9, and AN/VRC–10, simplified block diagram.

be performed manually, or the receiver signal may perform the function automatically. In the case of simple panel control, the microphone push-to-talk button provides this function. The more complex control arrangements are essentially extensions of the push-to-talk function through the circuits of components intervening between the operator's push-to-talk button and the control circuits of the receiver-transmitter.

b. Basic Arrangement. Figure 3 shows the manner in which the receiver-transmitter may be associated with a minimum of components to provide a workable system. The antenna, handset, and power supply are connected by suitable cables to the panel connectors of the receiver-transmitter. Note that one receiver-transmitter can be used to establish a simple push-to-talk installation under control of the handset push-to-talk button. A set of relays within the receiver-transmitter connect power, and the antenna, so that either the transmitter is on and the receiver is off or the receiver is on and the transmitter is off.

c. References. The major components which are normally associated with Receiver-Transmitters RT–66/GRC, RT–67/GRC, and RT–68/GRC are described in separate technical manuals (app I). The manner in which the receiver-transmitters are used as part of a complete installation in a communication network is described in separate technical manuals.

5. Technical Characteristics

a. Overall Equipment.

Frequency range detented or tunable:	
Receiver- Transmitter RT–66/GRC.	20 through 27.9 mc.
Receiver - Transmitter RT–67/GRC.	27 through 38.9 mc.
Receiver - Transmitter RT–68/GRC.	38 through 54.9 mc.
Type of signals transmitted receiver.	Fm voice and 1,600-cycle ringing.
Type of tuning	Choice of detent or preset channels or continuous tuning.
Number of detent channels available:	
Receiver - Transmitter RT–66/GRC.	80.
Receiver - Transmitter RT–67/GRC.	120.
Receiver - Transmitter RT–68/GRC.	170.
Number of preset detented channels.	2.
Channel spacing	100 kc.
Communication range:	
Vehicles in motion	10 miles, approximately.
Stationary vehicles	15 miles, approximately.
Antenna requirements	One whip antenna serves both the transmitter and receiver circuits.
Antenna circuit tuning	Transmitter antenna circuit tunable at 1–mc intervals for a particular antenna installation by means of the antenna tuning control. After adjustment, tuning is automatic for all channels. Receiver antenna circuit tuned at one frequency for use over frequency range
Type of operation	Push-to-talk; transmitter normally off.
Power supply requirements	Vibrator-type Power Supply PP–109/GR or PP–112/GR for vehicular installations; dry batteries in Case CY–590/GRC and/or hand Generator G–8/GRC for ground installations.
Voltage of storage battery in vehicular installations.	12 volts with Power Supply PP–109/GR or 24 volts with Power Supply PP–112/GR.

Input voltages:	*High power* (dc)	*Low power* (direct current) (dc)
Receiver filaments	6.3 volts (595 ma) (milliamperes)	6.3 volts (595 ma)
Transmitter filaments	6.3 volts (1.415 amperes)	6.3 volts (1.415 amperes)
Relay control circuits	5.6 volts (431 ma)	5.6 volts (431 ma)
Receiver plates	85 volts (50.5 ma)	85 volts (50.5 ma)
	105 volts (20 ma)	105 volts (20 ma)
Transmitter plates	85 volts (70.7 ma)	90 volts (75 ma)
	150 volts (37.5 ma)	90 volts (22.5 ma)
	250 volts (11.5 ma)	105 volts (4.8 ma)
	450 volts (75 ma)	200 volts (33.5 ma)
Transmitter bias	−27 volts (2 ma)	0 volt

b. Transmitter Circuit.

Power output	Choice of high or low power.
Low power	2 watts.
High power	16 watts.
Maximum modulation frequency deviation.	±20 kc, approximately.

Type of transmitter circuit.	Crystal-controlled oscillator and oscillator power amplifier.
Crystal frequencies	See table I (par. 12).
Transmitter variable oscillator frequency.	4.45 to 5.45 mc.
Type of operational control	Push-to-talk; transmitter normally in standby condition.
Transmitter input impedance.	150 ohms.
Transmitter audio input level.	25-volt rms (root mean square).

b. Receiver Circuit.

Type of receiver circuit	Double conversion superheterodyne.
First i. f. (intermediate frequency).	Variable between 4.45 and 5.45 mc.
Second i. f.	Fixed at 1.4 mc.
Harmonic generator frequency range.	See table II (par. 12).
Second mixer oscillator frequency range.	Variable between 3.05 and 4.05 mc.
Type of operational control	Receiver normally in standby condition and silenced by squelch action. Turned on by signals having a minimum level determined by the setting of the SQUELCH control.
Receiver bandwidth:	
6-db (decibel) down	85 kc.
30-db down	120 kc.
60-db down	160 kc.
Receiver audio power output:	
At loudspeaker terminals of AUDIO connector.	800 mw (milliwatt) maximum.
At handset terminals of AUDIO connector.	50 mw.
At retransmit terminals of REC-TR CONTROL connector.	20 mw.

Note. The value of 20 mw is the value at which the fixed level audio amplifier is adjusted at the factory. An internal control permits readjustment to this value if necessary.

Audio power output control	Continuously variable by means of panel-mounted VOLUME control.
Audio output impedance	600 ohms.
Squelch control	Continuously variable, panel-mounted control adjusts squelch sensitivity. OFF position of control disables squelch circuit.

d. Auxiliary Circuits.

Test facilities	Meter and test switch on front panel checks transmitter power output, filaments of all tubes (except the receiver r-f (radio-frequency) amplifier and transmitter power amplifier) and 90-volt input. Receiver test connector on chassis permits checking key points in the circuit.

6. Description of Receiver-Transmitter

a. Receiver-Transmitters RT–66/GRC, RT–67/GRC, and RT–68/GRC are double-conversion type superheterodyne f-m receivers and f-m transmitters. They are designed for the reception and transmission of f-m voice signals within the tuning range of 20 through 54.9 mc. This range is divided among the three sets as shown in figure 2. Each set has detent channels at integral 100-kc points and two of these detent channels can be preset. In addition, the detent arrangement can be released for continuous tuning over the entire band.

b. A front view of a typical receiver-transmitter is shown in figure 1. The unit is a compact, lightweight panel and chassis assembly with an outer cover. All operating controls, cable connectors, and indicators are mounted on the front panel and are immediately accessible. The panel is recessed to prevent damage to the controls from impact. The case is attached to the front panel by means of wing-type, spring preloaded Dzus fasteners to effect a watertight assembly. Channel rails are attached to the bottom of the case so that the unit can be secured to a suitable mounting used in a vehicular installation. The case may be removed by turning the Dzus fasteners on the front panel one-fourth of a turn and sliding the case off from the rear. The dimensions of the entire unit are approximately 9 inches high, 11¼ inches wide, and 13 inches deep. The weight of the complete unit is approximately 34 pounds.

c. Figures 4 through 7 show a typical panel and chassis assembly removed from the case. The receiver-transmitter consists of three separable subchassis (fig. 40), namely, a front panel, an r-f chassis, and an i-f chassis. The r-f chassis mounts the h-f (high-frequency) parts of both the transmitting and receiving circuits. The receiver i-f components and the audio components of both the

transmitter and receiver are mounted on the i-f chassis. Both chassis are attached to projections at the rear of the front panel by means of screws and are so arranged that all internal tuning adjustment controls, tubes, and plug-in parts are accessible without disassembly of the unit. No solder connections are made between the r-f and i-f chassis or between these chassis and the front panel. Multiconnector plugs and jacks establish continuity between the chassis and the panel controls and connectors. Two side plates and a back plate add to the rigidity of the assembly. By removing the screws, the back plate, and the side plates and by disconnecting the multiconnectors and shaft couplings, either one or both chassis may be removed for maintenance purposes.

(1) The cast-aluminum front panel (figs. 1, 12, and 41) mounts all operating controls and connectors, a meter with a METER switch, the dial drive assembly, and the flexible couplings for the receiver and transmitter antenna tuning capacitors and for the transmitter antenna coupling unit. Flexible couplings connect the adjustment controls on the front panel to the receiver antenna capacitor and to the transmitter antenna coupling on the r-f chassis. The dial drive assembly, mounted on the rear of the front panel (fig. 41), couples mechanically to the drive mechanism mounted on both the r-f and i-f chassis for tuning the r-f circuits and variable i-f circuits, respectively.

(2) The r-f chassis of the three receiver-transmitters are similar in structure and component arrangement. There are some differences, however, mainly in the inductances of the tuning coils and in the number of frequency-determining crystals required. Figure 5 shows the *component* side of the r-f chassis. Also refer to figures 43 through 49. The r-f chassis mounts the h-f components of both the receiver and the transmitter, the crystal oscillator-harmonic generator circuit components (including tuning capacitors), crystals, the crystal switch assembly, and associated parts. The worm gear assembly (fig. 5) is connected by means of a flexible coupling (O307) to the receiver antenna tuning control, marked REC ANT TUNE on the panel. The cam assembly is actuated by the dial drive assembly to tune the transmitter antenna capacitor (TR ANT TUNE) as the dial assembly is rotated. This and other details of the dial drive mechanism and its functions are described in paragraph 13. Multiconnectors J4 and J5 (fig. 43) are for connection to the front panel circuits. Toothed crown couplings on the shafts of the variable gang capacitors are arranged to mate and interlock with corresponding couplings on the dial drive assembly on the front panel. These couplings are keyed to coordinate dial and variable capacitor settings.

(3) The i-f chassis (figs. 6 and 50 through 59) mounts the components of the variable and fixed receiver i-f amplifier circuits, the receiver and transmitter l-f (low-frequency) oscillators, the transmitter reactance modulator, and the receiver and transmitter audio circuits. One of three control relays (O101) also is mounted on this chassis (fig. 50). A crown coupling (fig. 51) on the variable i-f gang capacitor engages a corresponding coupling on the dial drive assembly in a manner similar to that described in (2) above.

d. The r-f and i-f tuning capacitors (C1 and C101) are driven directly from shafts which extend out of the front panel dial drive assembly (fig. 11). The harmonic amplifier tuning capacitor (C17) and the crystal switch are driven from the dial drive assembly by additional gears at the rear of the set.

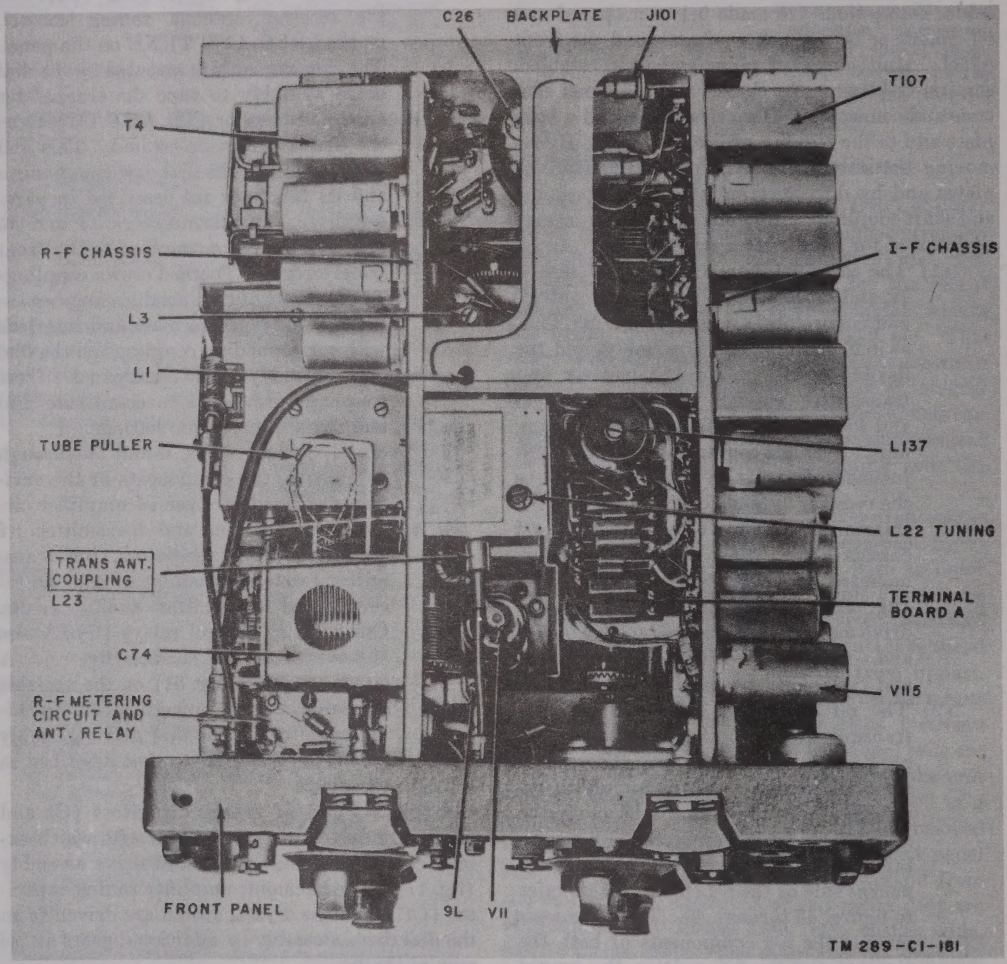

Figure 4. Typical receiver-transmitter, case removed, top view of panel and chassis assembly.

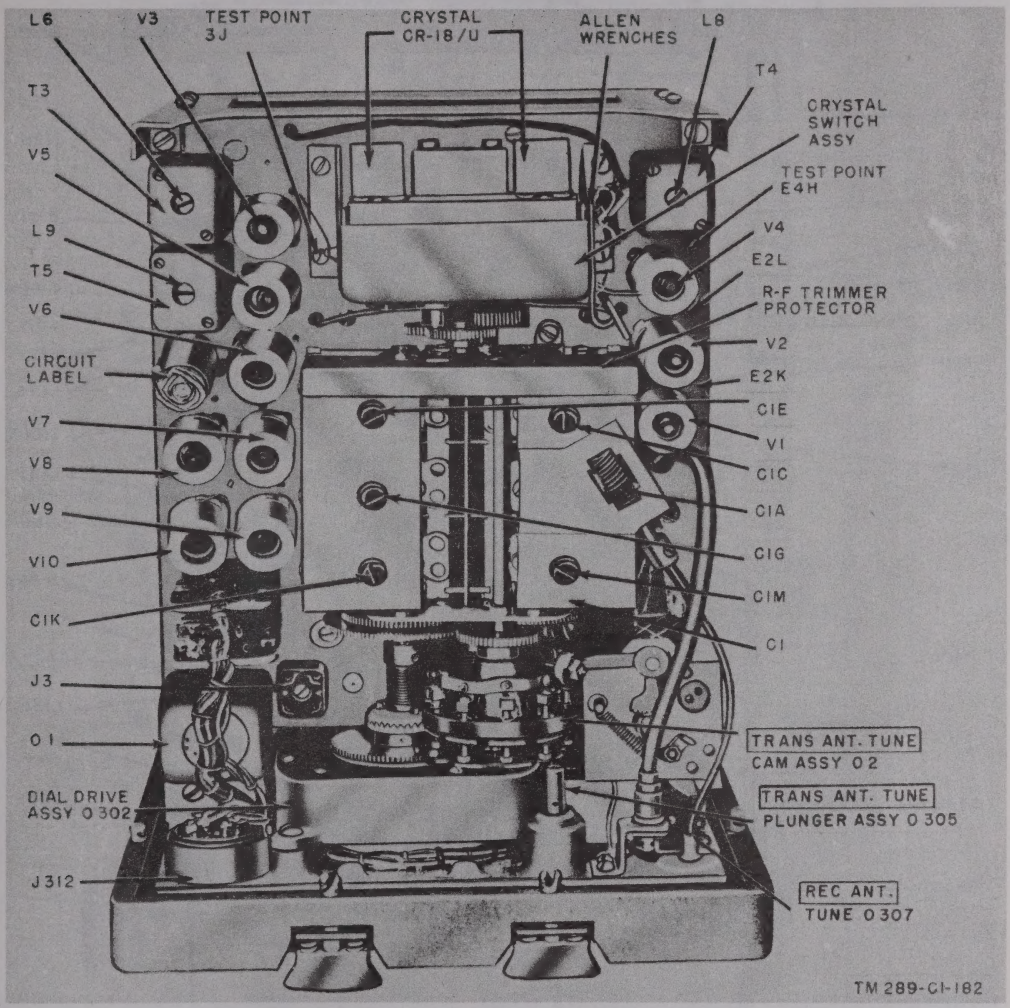

Figure 5. Typical receiver-transmitter, case removed, view of r-f chassis (left side of panel and chassis assembly).

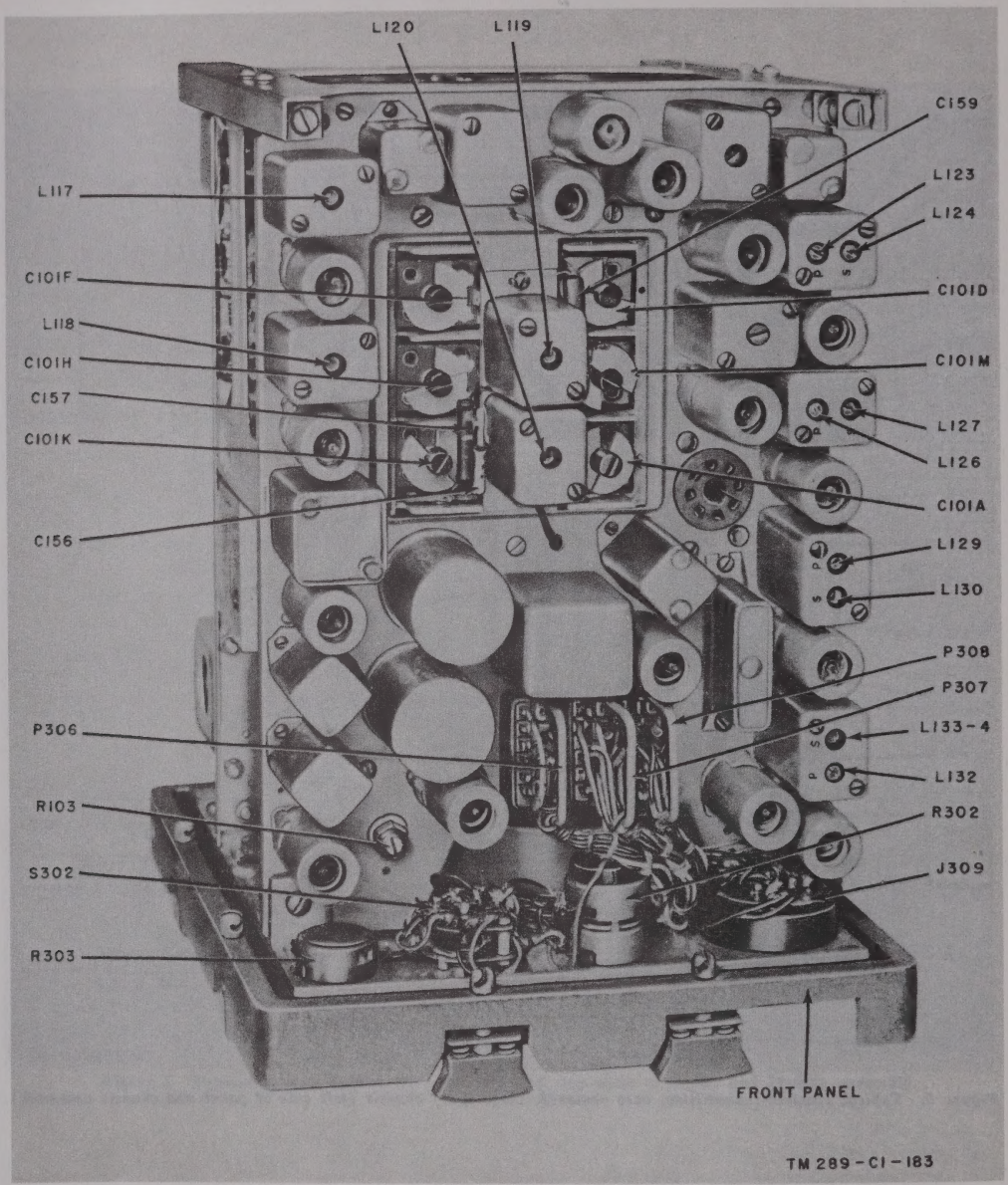

Figure 6. Typical receiver-transmitter, case removed, view of i-f chassis (right side of panel and chassis assembly).

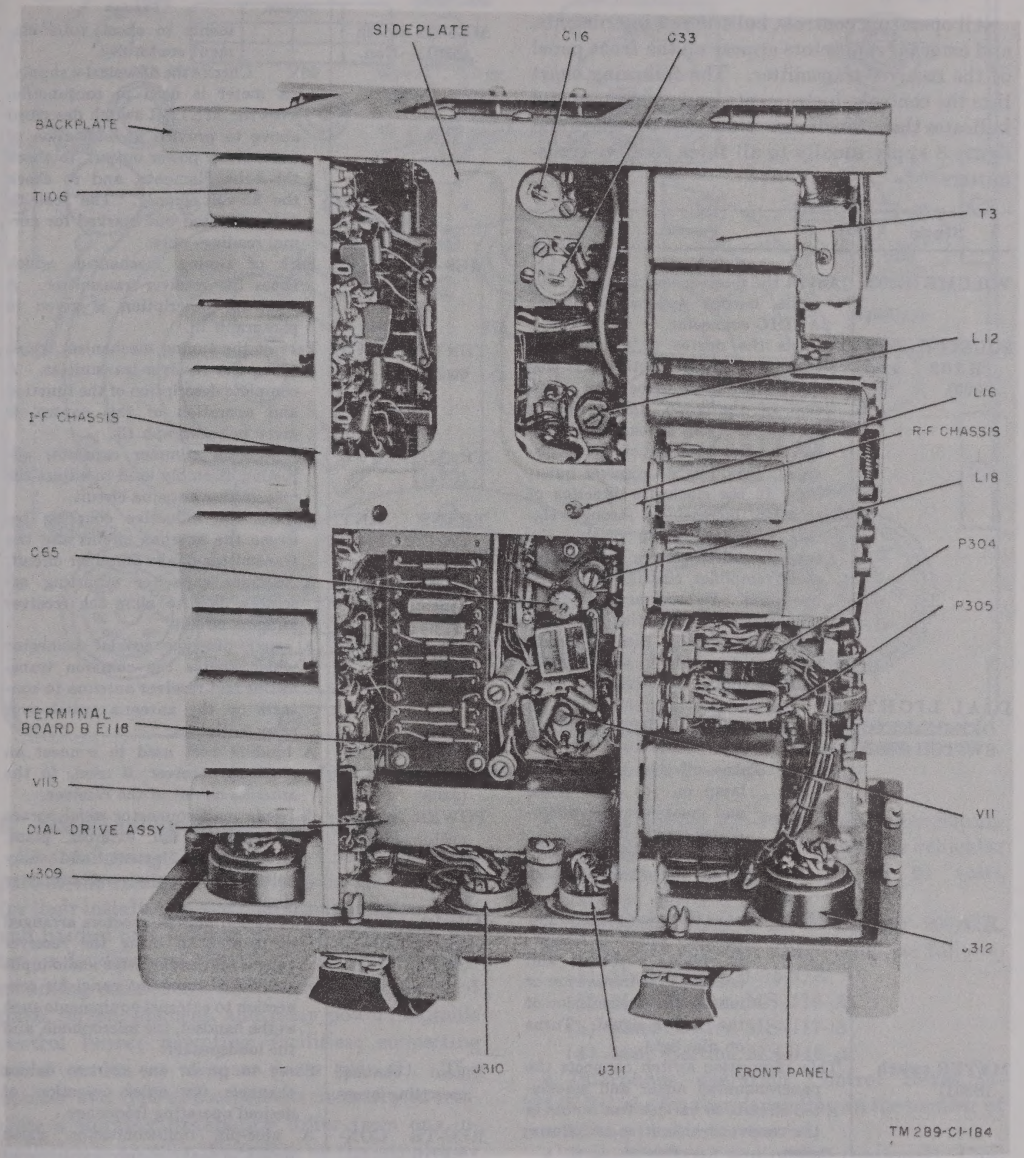

Figure 7. Typical receiver-transmitter, case removed, bottom view of panel and chassis assembly.

7. Controls, Instruments, and Connectors

(fig. 8)

All operating controls, built-in test instruments, and external connectors appear on the front panel of the receiver-transmitter. The following chart lists the controls, instruments, and connectors and indicates their functions. Note that the chart and figure 8 apply equally to all three receiver-transmitters.

Control	Function
VOLUME (R303)	Adjust the receiver low and high level audio output appearing at the AUDIO connector.
SQUELCH - OFF (R302 and S303)	Adjusts the degree of the receiver squelch or noise quieting. In the maximum counterclockwise position of the knob, the switch is turned OFF and the squelch or receiver noise quieting circuit is disabled, providing no receiver quieting. In the clockwise direction of rotation, increasingly stronger signals are required to disable the squelch and to restore the receiver audio amplifier circuits to normal operation. For any setting of the potentiometer, a particular signal-plus noise-to-noise ratio is determined below which the receiver audio output is inoperative.
DIAL LIGHT OFF-ON-RING SWITCH (S302)	A three-position switch which is spring loaded in the RING position. *Position* — *Function* OFF — Turns off dial illuminating lamp on the from panel and completes the microphone input circuit. ON — Turns on dial light and completes the microphone input circuit. RING — Breaks the microphone input circuit. Turns on a built-in ringing oscillator and energizes the transmitter or initiate the transmission of the ringing signal. Turns on dial light.
METER switch (S301)	This 12-position switch connects the panel-mounted meter and associated circuits to various test points in the receiver-transmitter as follows: *Position* — *Function* RF — Connects the meter for measuring r-f voltage at transmitter antenna. 2 through 11 — Connects the meter into one of several series-parallel arrangements of tube filaments to check tube filament continuity. 90V — Checks the 85-volt d-c supply.
Meter(M301)	1-ma meter is used in conjunction with the METER switch described above to provide an indication of transmitter power output, to check the tube filaments, and to check the 85-volt supply. The scale is not calibrated but marked for normal readings only.
MCS control	Part of tuning mechanism which tunes the receiver-transmitter. A complete description is given in paragraph 13.
TENTH MCS control	Part of the tuning mechanism which tunes the receiver-transmitter. A complete description of the function and operation of this control is giver in paragraph 13.
TR ANT TUNE (C74)	An antenna trimmer capacitor adjusting assembly used to adjust the transmitter antenna circuit.
TRANS ANT COUPLING (L23)	Adjusts the inductive coupling between the antenna circuit and the transmitter power amplifier circuit.
REC ANT TUNE control (C1A)	A trimmer capacitor adjusting assembly used to aline the receiver antenna circuit.
ANT connector (J307)	A small, pin-type coaxial connector which routes the common transmitter and receiver antenna to contacts on the antenna switch-over relay in the set.
AUX REC ANT connector (J308)	A binding post used to connect an auxiliary receiver, if used, to the antenna circuit of the receiver.
POWER IN connector (J309).	A 14-pin multiconnector which serves to connect the external plate, screen bias, filament, and relay voltages to the receiver-transmitter circuits.
AUDIO connectors (J310 and J311).	Two 10-pin multiconnectors arranged in parallel to bring the receiver output and transmitter audio input circuits to the front panel for connection to external equipments such as the handset, the microphone, and the loudspeaker.
Detent channel presetting levers.	Serve to preset one or two detent channels for quick selection of desired operating frequency.
REC-TR CONTROL connector (J312).	A nine-pin multiconnector which serves to make connection between the control circuits in the receiver-transmitter and external components such as control boxes, junction boxes, etc., as required by a particular installation.

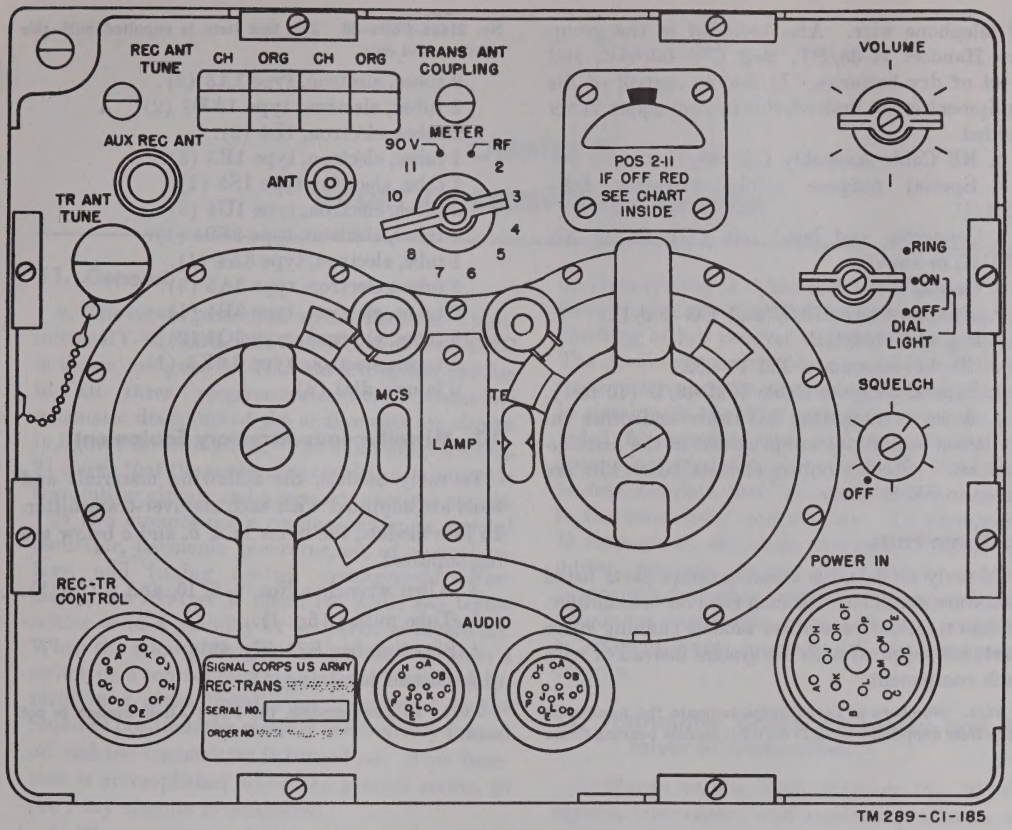

Figure 8. Typical receiver-transmitter, panel controls and connectors.

8. Additional Equipment Required

The following materials are not supplied as part of the receiver-transmitters but are required for their installation and operation: a microphone and headset or a handset with a push-to-talk button; a loudspeaker (optional); an antenna with mounting components and hardware; a source of plate, screen, filament, and relay power; suitable control boxes; mounting facilities; connecting cables; and a set of spare parts (par. 9). The number and type of components necessary to complete a working installation differ from one installation to another, depending on the complexity of the system. The materials normally supplied for a typical installation of Radio Set AN/VRC–8 are given below:

a. Receiver-Transmitter RT–66/GRC.

b. Power Supply PP–109/GR or Power Supply PP–112/GR, depending on whether the vehicular storage battery voltage is 12 or 24 volts, respectively.

c. Equipment mount, Mounting MT–299/GR.

d. Vehicular anttenna components, as follows:

(1) Mast Base AB–15/GR.
(2) Mast Section MS–116–A.
(3) Mast Section MS–117–A.
(4) Mast Section MS–118–A.

e. Interphone operation Control Boxes C–375/VRC, the number depending on the number of monitoring positions required.

f. Remote control equipment (optional), Control Group AN/GRA–6, as follows: Local Control C–434/GRC and Remote Control C–433/GRC. These units provide for remote control of the equipment over a distance of not more than 2 miles

of telephone wire. Also included in the group are Handset H–33/PT, Bag CW–189/GR, and a set of dry batteries. If remote control of the equipment is not desired, this control group is not needed.

g. RF Cable Assembly CG–568/U.

h. Special purpose Cable Assembly CX–1211/U.

i. Connector and bond nut (Sig C stk No. 6Z3147, or equal).

j. Case CY–684/GR.

k. Adapters UG–273/U and UG–306/U.

l. Bag CW–206/GR.

m. Technical manual TM 11–286.

n. Sepcial Purpose Cable WM–46/U (10 feet).

o. A set of mounting hardware and other installation accessories are provided in the *installation kit.* (Stock numbers of installation kits are given in SB 11–131.)

9. Spare Parts

In early models, the running spare parts listed below are supplied with each receiver-transmitter. In late receiver-transmitter models running spare parts are supplied with the system instead of with each component.

Note. Numbers in parentheses indicate the number of each item supplied with RT–66/GRC models bearing Order No. 21434–Phila–50. The last item is supplied with the above model only.

2 tubes, electron, type 1A3 (2).
2 tubes, electron, type 1AE4 (2).
2 tubes, electron, 1L4 (2).
4 tubes, electron, type 1R5 (3).
1 tube, electron, type 1S5 (1).
6 tubes, electron, type 1U4 (2).
3 tubes, electron, type 2E24 (1).
1 tube, electron, type 3A4 (1).
5 tubes, electron, type 3A5 (3).
2 tubes, electron, type 3B4 (1).
6 tubes, electron, type 3Q4 (2).
2 tubes, electron, type 6AK5 (1).
0 lamps, dial (3).

10. Miscellaneous Accessory Equipment

In early models, the following materials and tools are supplied with each receiver-transmitter. In late models, the items in *a*, *b*, and *c* below are not supplied.

a. Allen wrenches Nos. 4, 6, 10, and 8 (fig. 5).

b. Tube puller (fig. 4).

c. Shorting bar E74 (fig. 43).

d. Circuit label (fig. 5).

Note. In some models, the No. 4 Allen wrench is not used.

CHAPTER 2

THEORY OF RECEIVER-TRANSMITTER

11. General

a. The signal path of a typical Receiver-Transmitter RT–66/GRC, RT–67/GRC, or RT–68/GRC is shown in figure 9. This block diagram applies to all three receiver-transmitters. Complete schematic diagrams of the equipments are shown in figures 79 through 82. The block diagram (fig. 9) shows that the equipment consists of a separate transmitter circuit and a separate receiver circuit. The two circuits use a common antenna, crystal oscillator, harmonic generator, set of control relays, and tuning control arrangement. Normally, the receiver is operative while the transmitter is in a standby or inoperative condition. When the microphone button is closed or when a switch on a control unit associated with the equipment in a given installation is operated to the required position, the receiver is effectively turned off and the transmitter is turned on. This function is accomplished when the ground return to the relay circuits is completed.

b. The transmitter functions to convert speech signals from an external microphone, an interphone amplifier, a telephone line, or another suitable a-f (audio-frequency) source into an f-m carrier signal. This is accomplished by causing the a-f signals to shift the frequency of an r-f oscillator, the output of which is mixed with a fixed r-f frequency, to obtain the desired carrier frequency. The resultant modulated carrier frequency is transmitted over the air. The function of the receiver is to accept f-m carrier signals and to convert them into the original audio signals. The frequency range of the receiver-transmitter depends on the particular set involved (fig. 2). The range of the receiver-transmitter is divided into a number of preset 100-kc channels. Optionally, continuously variable tuning may be used.

c. In addition to the main receiver and transmitter circuits, auxiliary circuits are provided. These include a ringing oscillator for the purpose of transmitting a 1,600-cycle call signal. Test circuits also are included to permit rapid spot checking of key receiver and transmitter circuits. The frequency conversion process for both the transmitter and the receiver is discussed briefly in paragraph 12. The tuning arrangement provided for selecting the desired operating frequency is discussed in paragraph 13. Paragraph 14 describes the control circuits which are common to the transmitter and receiver. In paragraphs 15 through 17, the block diagrams of the transmitter, receiver, ringer, test circuit, and afc (automatic frequency control) are discussed. The remaining paragraphs of this chapter constitute a stage-by-stage analysis of the equipment circuits.

12. Transmitter Carrier Frequency and Receiver I-f Generation

As shown on the block diagram (fig. 9), the crystal, transmitter, and receiver oscillators are used to produce the transmitting carrier frequencies and the two intermediate frequencies of the receiver. Two of these are continuously variable, and one is adjustable in 1-mc steps. The transmitter and receiver are tuned to the same frequency at all times. The tuning arrangement (par. 13) coordinates the tuning of these three oscillators with one another and with the signal paths.

a. Crystal Oscillator-Harmonic Generator and Harmonic Amplifiers V3 through V5. The common crystal oscillator-harmonic generator, V3, and the first harmonic amplifier, V4, function with the received signal to provide the variable first i. f. (which is between 4.45 and 5.45 mc). V3 and V4 also serve with second harmonic amplifier V5, in conjunction with variable transmitter oscillator V104A, to provide the transmitting carrier frequency. Crystal oscillator V3 is tunable in 1-mc steps by the selection of crystals. Table I shows

Table I. Receiver-Transmitter Crystal Frequencies

Crystal position No.	Crystal frequencies (kc)		
	RT-66/GRC	RT-67/GRC	RT-68/GRC
1			8, 387. 500
2	7, 775. 000	7, 516. 666	8, 637. 500
3	8, 275. 000	7, 850. 000	8, 887. 500
4		8, 183. 333	6, 091. 666
5	8, 775. 000	8, 516. 666	6, 258. 333
6		8, 850. 000	6, 425. 000
7	6, 183. 333	6, 887. 500	6, 591. 666
8			6, 758. 333
9	6, 516. 666	7, 137. 500	6, 925. 000
10		7, 387. 500	7, 091. 666
11	6, 850. 000	7, 637. 500	7, 258. 333
12		7, 887. 500	7, 425. 000
13	7, 183. 333	8, 137. 500	7, 591. 666
14	7, 516. 666	8, 387. 500	7, 758. 333
15			7, 925. 000
16			8, 091. 666
17			8, 258. 333

Note. Crystal position number increases in clockwise rotation of S1.

the crystal frequencies used in each of the receiver-transmitters. The frequency generated by the crystal oscillator remains fixed for each group of 10 adjacent channels. The output of the harmonic generator is tuned to a frequency which is below the nominal receiver-transmitter frequency by the amount of the variable i. f. The output circuit of crystal oscillator-harmonic generator V3 is fed to first harmonic amplifier V4. V3 through V5 are tuned by capacitor C17. In Receiver-Transmitter RT–68/GRC, the first harmonic amplifier is tuned to twice the input frequency for part of the band and acts as a doubler. In Receiver-Transmitters RT–66/GRC and RT–67/GRC, it is tuned to the input frequency and acts only as an amplifier. The output of the first harmonic amplifier is fed over one path to receiver mixer V2 where, during reception of a signal, the first variable i. f. (4.45 to 5.45 mc) is produced. Another path applies the output to second harmonic amplifier V5, where it is amplified. The output of V5 is applied to transmitter V6, where during transmission, it is combined with the output of transmitter oscillator V104A to produce the desired transmission frequency. First harmonic amplifier frequencies are given in table II.

b. Transmitter Oscillator V104A. Variable transmitter oscillator V104A serves in conjunction with the crystal oscillator-harmonic generator (*a* above) to provide the transmitter carrier frequency. It is tunable over a frequency range of 4.45 and 5.45 mc by variable capacitor C101. For any setting of this capacitor, the transmitter reactance modulator (V105 and V106) shifts the fre-

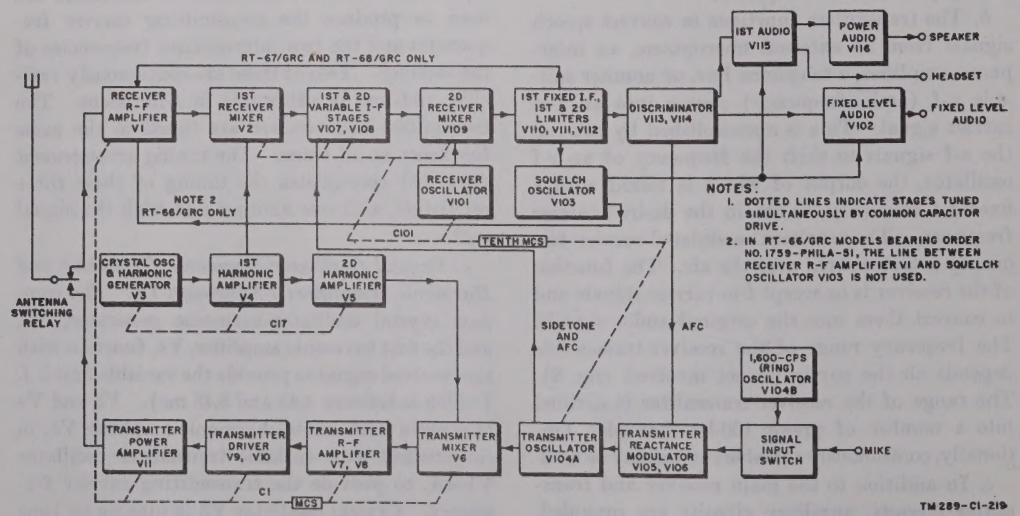

Figure 9. Receiver-transmitter, block diagram.

Table II. First Harmonic Amplifier V4 Frequencies

Receiver-Transmitter	MCS control frequency (mc)	Circuit output frequency (mc)	Crystal harmonic used
RT–66/GRC	20	15. 55	2d
	21	16. 55	2d
	22	17. 55	2d
	23	18. 55	3d
	24	19. 55	3d
	25	20. 55	3d
	26	21. 55	3d
Common	27	22. 55	3d
RT–67/GRC	28	23. 55	3d
	29	24. 55	3d
	30	25. 55	3d
	31	26. 55	3d
	32	27. 55	4th
	33	28. 55	4th
	34	29. 55	4th
	35	30. 55	4th
	36	31. 55	4th
	37	32. 55	4th
Common	38	33. 55	4th
RT–68/GRC	39	34. 55	4th
	40	35. 55	4th
	41	36. 55	6th
	42	37. 55	6th
	43	38. 55	6th
	44	39. 55	6th
	45	40. 55	6th
	46	41. 55	6th
	47	42. 55	6th
	48	43. 55	6th
	49	44. 55	6th
	50	45. 55	6th
	51	46. 55	6th
	52	47. 55	6th
	53	48. 55	6th
	54	49. 55	6th

quency of transmitter oscillator V104A by an amount and at a rate determined by the audio signals from the microphone. The f-m output of transmitter oscillator V104A is applied to transmitter mixer V6 and with the output of second harmonic amplifier V5, produces the transmission frequency. The tuning of capacitor C101 is coordinated through the tuning mechanism with the tuning of crystal oscillator-harmonic generator V3 (by C17) so that the sum of the frequencies produced by these two oscillators is equal to the desired transmission frequency. To have the frequency of transmission and reception the same, the transmitter oscillator is placed under the control of the receiver oscillator and discriminator circuits through the reactance modulator.

c. Receiver Oscillator V101. Variable receiver oscillator V101 is tuned, in either 100-kc steps or by continuous variation, over the frequency range between 3.05 and 4.05 mc by variable capacitor C101. The output of the oscillator is applied to receiver second mixer stage V109, and together with the signal output of the variable i-f amplifier produces the receiver fixed i. f. of 1.4 mc.

13. Tuning Arrangement

(figs. 10, 11, and 12)

a. General. The receiver-transmitter is tuned to the desired operating frequency by the MCS and TENTH MCS controls (fig. 8). These controls are associated with each other through a dial-drive mechanism mounted on the back of the panel and operate on the decade principle to tune the receiver-transmitter in either 1-mc or 100-kc steps or by continuous variation. The left-hand MCS control tunes the set in 1-mc steps. The dial associated with that control is calibrated in intervals of 1 mc (fig. 12) and the dial numbers read directly in mc. Within each mc range set up by the MCS control, the right-hand TENTH MCS control tunes the set either in steps of 100 kc, corresponding to an individual channel, or continuously. The dial associated with that control is numbered in tenths of megacycle and has subdivision markings at 25-kc intervals (fig. 12). The frequency to which the set is tuned is obtained by taking the number shown in the MCS control window as an integer and the number shown in the TENTH MCS control as a tenths digit. Thus, with the MCS control set to 32 and the TENTH MCS control set to 9, the set is tuned to a frequency of 32.9 mc. The channel number to which the set is tuned is the frequency in mc multiplied by 10. In the above example, the channel number is 329.

b. Tuned Circuits. The tuning arrangement conrols the settings of ganged capacitors C1, C17, C74, and C101, which, in turn, determine the frequency settings of the receiver-transmitter circuits as given in table III.

Table III. Variable Tuned Circuits

Control item	Receiver-transmitter circuit controlled	Frequency range (mc)	Type of control
Capacitor C1	Receiver r-f amplifier V1 (T2) Receiver antenna circuit (T1). Transmitter mixer V6 (T6). Transmitter r-f amplifiers V7 and V8 (T7). Transmitter drivers V9 and V10 (T8). Transmitter power amplifier V11 (T9).	20 to 27.9 for RT–66/GRC or 27 to 38.9 for RT–67/GRC or 38 to 54.9 for RT–68/GRC	Continuously variable or variable in 100-kc or in 1-mc steps.
Capacitor C17	Harmonic generator-harmonic amplifiers V3, V4, and V5 (T3, T4, and T5).	15.55 to 22.55 for RT–66/GRC or 22.55 to 33.55 for RT–67/GRC or 33.55 to 49.55 for RT–68/GRC	Variable in 1.0-mc steps.
Capacitor C101	Receiver oscillator V101 (T101) Receiver first mixer V2 (T107) Variable i-f amplifiers V107 and V108 (T108 and T109). Transmitter oscillator V104A (T103) Receiver second mixer V109 (T109)	3.05 to 4.05 4.45 to 5.45 4.45 to 5.45 4.45 to 5.45 4.45 to 5.45	Continuously variable or variable in .1-mc steps.
Capacitor C74	Transmitter antenna tuning	20 to 27.9 for RT–66/GRC or 27 to 38.9 for RT–67/GRC or 38 to 54 9 for RT–68/GRC	Continously variable.

c. Mechanical Coupling and Gearing Arrangement. The panel-mounted dial-drive assembly is used to couple the MCS and TENTH MCS controls to each other, to the geared variable gang capacitor shafts, to the shaft of the crystal switch in the crystal assembly unit, and to the transmitter antenna tuning cam (figs. 10 and 11).

(1) Gears within the dial-drive assembly couple the dial drives to three driving shafts which extend into the interior of the set. These shafts are joined in turn by toothed crown couplings and flexible shafts (bellows) to the shafts of variable gang capacitors C1, C17, and C101.

(2) Each of the variable capacitor shafts is equipped with a set of gears. The gears are used to couple the two halves of each capacitor together. In addition, the gears on capacitor C1 are used to couple transmitter antenna tune capacitor C74 to C1. Gears in the back of capacitors C1 and C17 are coupled through a rigid coupling to the shaft of crystal switch S1 in the crystal assembly unit. The gears are driven by the shaft that drives capacitor C17.

(3) The gear reduction ratio and the gearing arrangement (gears on the capacitors and within the dial-drive assembly) are such that every time the MCS control is rotated from one step to the next, the crystal switch shifts to the number of steps required to introduce into the circuit the crystal associated with the particular dial frequency. In addition, the plates of capacitor C17 are rotated by an amount which corresponds to a change of tuning by 1 mc. Capacitor C101 is not rotated when the MCS control is turned.

(4) For every step of rotation of the TENTH MCS control, capacitor C101 is rotated by an amount corresponding to .1 mc and capacitor C1 likewise is rotated over an interval corresponding to .1 mc. The crystal switch and capacitor C17 are not rotated when the TENTH MCS control is turned.

(5) The positioning of r-f tuning capacitor C1 and the transmitter antenna tuning cam depends on the settings of the MCS and TENTH MCS controls. Capacitor C101 is rotated by the TENTH MCS control only. Capacitor C17 and crystal switch S1 are rotated by the MCS control only.

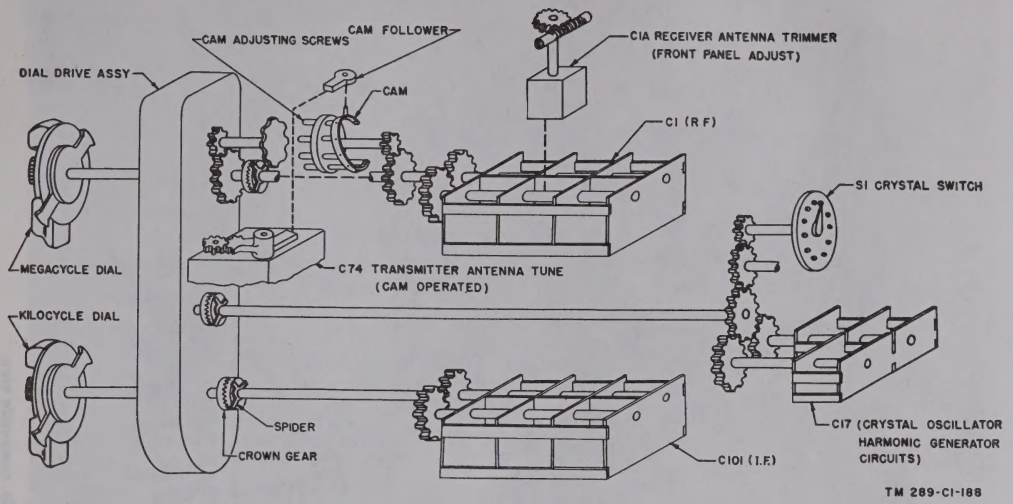

Figure 10. Receiver-transmitter, tuning arrangement, functional diagram.

d. Continuously Variable Tuning. The dial-drive assembly is arranged so that by returning the TENTH MCS control to a stop at its extreme counterclockwise position, the detent mechanism is removed and continuously variable tuning is obtained. This arrangement permits the reception of signals at frequencies other than those on the detent channels. By turning the TENTH MCS control to its extreme clockwise position, the detent action is restored.

e. Adjustment. The dial-drive assembly is a carefully designed and intricate assembly. Internal adjustments should not be made in the field. When difficulties with that mechanism are encountered, the whole unit should be replaced. By removing the knob and the dial plate cover on the front panel of the equipment, the detent screws (fig. 12) may be adjusted to provide proper detent action. This applies to the TENTH MCS control only. The assembly is waterproofed by gasket covers, which screw on to the front panel, and by fittings on the control shaft.

f. Number of Detent Settings. The number of detent settings of the MCS dial for each of the three receiver-transmitters corresponds to the number of 1-mc intervals included in the frequency band covered by that receiver-transmitter, as follows: Receiver-Transmitter RT–66/GRC, 8 detent positions; Receiver-Transmitter RT–67/GRC, 12 detent positions; and Receiver-Transmitter RT–68/GRC, 17 detent positions. Except for the number of detent positions for the MCS control, the differential gears and the detent mechanism built into the dial-drive assembly is standardized for all three sets. The portion of the dial-drive assembly associated with the TENTH MCS control and the number of detent positions (10) for that control are the same for all three sets.

g. Preselection of Detented Channels. A preselecting assembly (fig. 12) is associated with each of the two controls (MCS and TENTH MCS). Each consists of two levers, with serrated faces, which fit over the dial shaft and are held in place by the large screw holding the knob in place. Two stops are provided at the top of the dial cover plate. The two levers can be set at any angle with respect to each other and with respect to the dial by slightly releasing the screw that holds the knob. One lever is painted green and the other red. When the dial is rotated and reaches the preselected channel, the lever hits the stop. Thus the dial can be turned quickly to the preselected channel. The serrations on the levers prevent slippage. This arrangement is useful under operating conditions involving poor visibility or requiring speedy selection of either of two channels. The stop arrangement can be released and the dial permitted to rotate past the stop point by lifting and turning the stops.

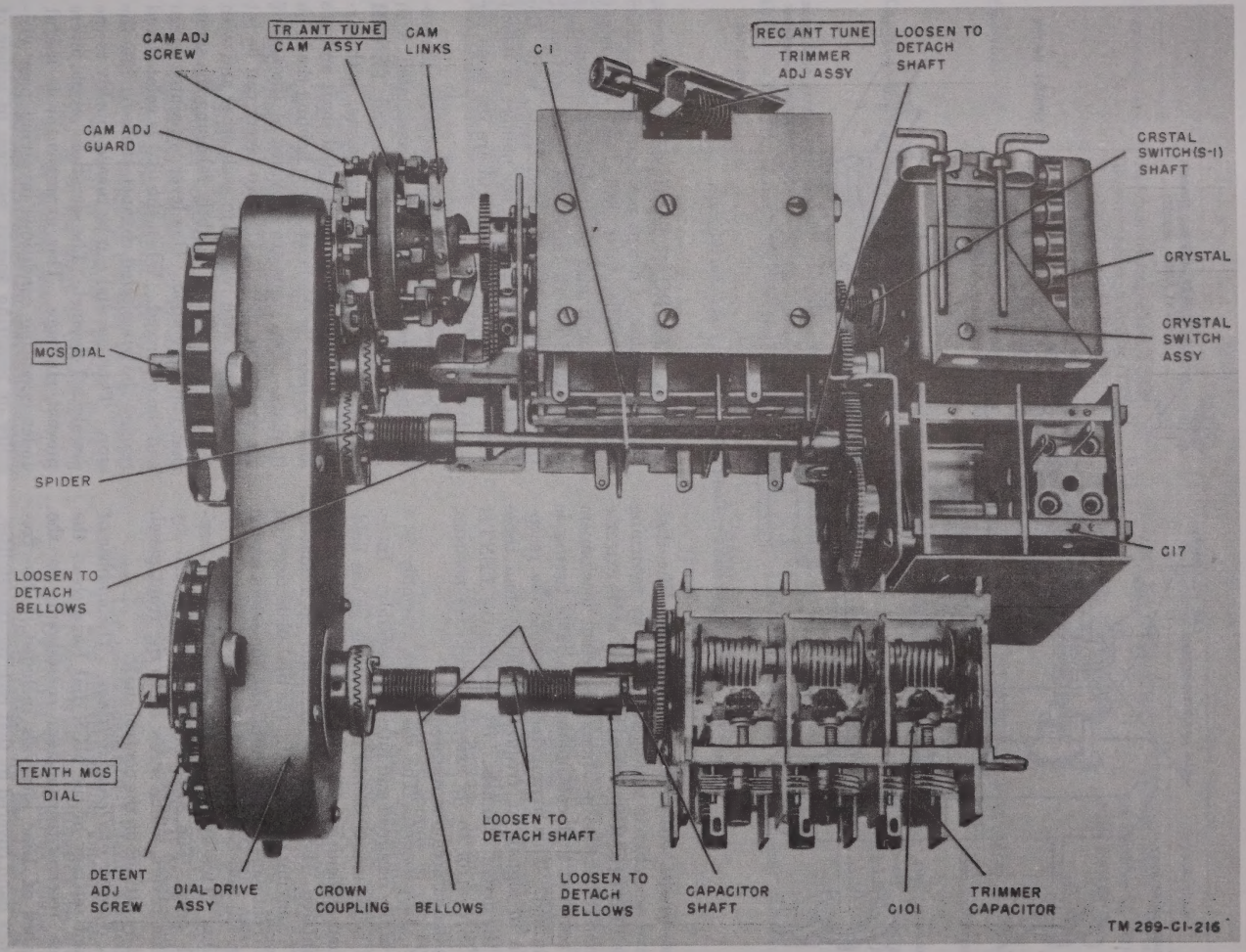

Figure 11. Receiver-transmitter, tuning assembly, composite view.

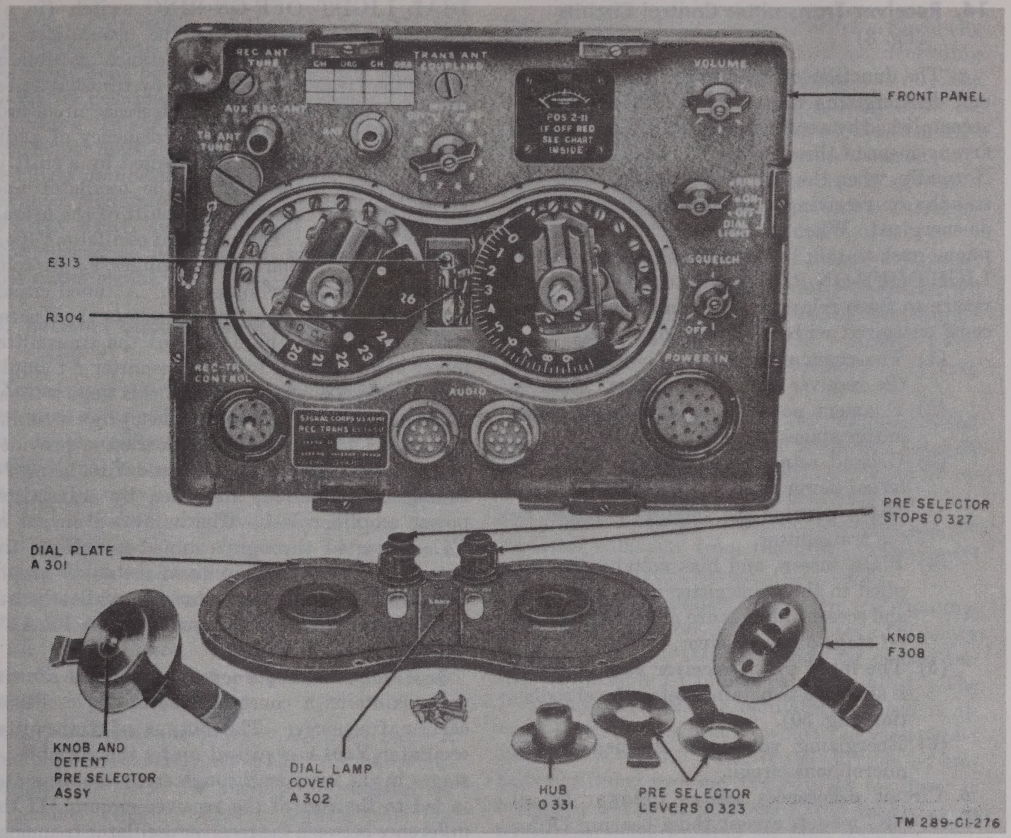

Figure 12. Front panel, dial plate removed and preselector disassembled.

h. Antenna Tuning Mechanism (figs. 10 and 11). Transmitter antenna tuning capacitor C74 requires a different setting for each position of the MCS and TENTH MCS controls. The setting also depends on the antenna installation. Accordingly, a cam made up of a number of links (fig. 10) corresponding to the number of mc settings for the particular receiver-transmitter is associated with the controls. As the MCS or TENTH MCS control is rotated, this cam rotates and imparts motion to a follower. The follower imparts motion to a gear drive which rotates antenna tuning capacitor C74. The curvature of the cam may be adjusted by a screwdriver from the TR ANT TUNE control. This control is covered by a waterproof cap which, when removed, exposes a wrench that is slotted for screwdriver operation. This wrench (spring loaded) lines up with a cam-adjusting screw at each setting of the MCS control when the TENTH MCS control is at 0. In addition, there is an adjusting screw at the highest dentent of each receiver-transmitter (27.9 mc, 38.9 mc, and 54.9 mc). By adjusting this screw, the maximum amount of rotation of antenna trimming capacitor C74 may be determined. In a given receiver-transmitter, this adjustment should be made only when the antenna is initially installed or when the antenna is changed, since the arrangement is to insure proper matching between the antenna and the antenna output circuits. The adjustments are made for a maximum reading on the front panel r-f meter.

14. Receiver-Transmitter Control Circuits (fig. 3)

a. The function of energizing the transmitter and de-energizing the receiver, or vice versa, is accomplished by a control consisting of the parallel arrangement of three relays, O1, O101, and O301. Normally, when the receiver-transmitter is in the standby or receiving condition, these relays are de-energized. When the operator closes the microphone push-to-talk button or operates the DIAL LIGHT OFF-ON-RING switch to RING, ground return to these relays is made and the relays become energized with the following results:

(1) The common antenna is switched from the receiver to the transmitter circuits.
(2) Filament power is applied to all transmitter stages.
(3) Ground return is completed to the external power supply to energize that supply to provide the voltages required by the transmitter.
(4) Plate, screen, and bias voltages are applied to the transmitter tubes and plate and screen voltages are removed from the r-f stage of the receiver.
(5) The input to the receiver audio circuits is switched to obtain sidetone level reduction (fig. 30).
(6) Energizing voltage is applied to the microphone circuit.

b. Circuit differences are as follows: In all RT–66/GRC models except those bearing Order No. 1759–Phila–51, and in all RT–67/GRC models except those bearing Order No. 1759–Phila–51 and 32111–Phila–51, serial numbers 13672 and up, voltage also is removed from the screen grid of receiver first mixer V2 ((4) above).

15. Transmitter Circuits, Block Diagram (fig. 9)

The transmitter circuits include transmitter reactance modulator (V105 and V106), transmitter oscillator V104A, crystal oscillator-harmonic generator V3, first and second harmonic amplifiers V4 and V5, transmitter mixer V6, transmitter r-f amplifier (V7 and V8 in parallel), transmitter driver (V9 and V10 in parallel), power amplifier V11, the transmitter antenna output circuit, and a common receiver-transmitter antenna.

a. Transmitter Signal Path. Voice signals from an external source are applied through the DIAL LIGHT OFF-ON-RING switch (in all positions except RING) to the transmitter reactance modulator. The reactance modulator causes the frequency generated by transmitter oscillator V104A to increase or decrease in accordance with the amplitude and frequency of audio signals. Modulation is represented by a shift in the frequency generated by the oscillator and ultimately by a corresponding shift of the overall carrier frequency. The output of oscillator V104A and the output of harmonic amplifier V5 are combined in transmitter mixer V6. A tuned circuit using r-f tuning capacitor C1 selects the desired sum frequency at the output of the transmitter mixer and applies it to the transmitter r-f amplifier, V7 and V8. The output of this stage is tuned to resonance at the carrier frequency by r-f tuning capacitor C1. Further amplification is provided by the transmitter driver, V9 and V10, using r-f tuning capacitor C1, and then by transmitter power amplifier V11. The amplified output of V11 is routed through a tuned circuit to the antenna. The output circuit of the power amplifier uses r-f tuning capacitor C1, while the antenna circuit is tuned to resonance by the TR ANT TUNE capacitor, C74.

b. Automatic Frequency Control. The afc circuit maintains a constant transmitter oscillator carrier frequency. The output of transmitter oscillator V104A is picked up by the variable i-f stages in the receiver through stray coupling and is fed to the rest of the receiver circuit. If the difference between the receiver oscillator frequency (used as the standard) and the transmitter oscillator frequency varies from the fixed intermediate frequency, a voltage is developed in the discriminator circuit. This voltage is used as the afc voltage and is fed to the transmitter reactance modulator, V105 and V106. The reactance modulator then corrects the transmitter oscillator frequency. The time constant of the afc output circuit of the discriminator is such that normal modulation of the i. f. does not appear in the afc voltage.

c. Sidetone. Sidetone voltage is obtained from transmitter oscillator V104A. This voltage is picked up by the variable i-f stages through stray coupling and is fed through the rest of the receiver circuit to the speaker and handset receiver (or headset).

d. Ringer Circuit. A ringer circuit, associated with the transmitter, is energized when the DIAL LIGHT OFF-ON-RING switch is in the RING

position. This switch has the same function for the ringing circuit that the push-to-talk button of the microphone has for the transmitter, since, in the RING position, the switch energizes the control relays. In addition, it applies power to 1,600-cycle ringer oscillator tube V104B. The output of the ringer oscillator is applied to the transmitter reactance modulator through the DIAL LIGHT OFF-ON-RING switch. Signal transmission is accomplished as described in *a* above for any other audio signal.

16. Receiver Circuits, Block Diagram (fig. 9)

The receiver is a double-conversion superheterodyne type arranged to receive f-m signals. The term double conversion means that the incoming carrier signal beats with one local oscillator frequency to produce a first i. f. (in these sets between 4.45 and 5.45 mc); this frequency in turn beats with another oscillator frequency to produce a second i. f. (in this case 1.4 mc). The discriminator demodulates the second i-f signal and the a-f section of the receiver amplifies the audio output of the discriminator. The amplified output is supplied to the receiver of a handset, a loudspeaker, or other equipment.

a. Input Circuit and Receiver R-f Amplifier V1. When the control relays are in their normal or unenergized positions, the antenna is connected to the receiver circuits. Carrier signals from the antenna are developed in the antenna circuit, which is tuned by r-f tuning capacitor C1. The signals selected are applied to receiver r-f amplifier V1, the output of which is tuned by capacitor C1. The amplified output of this stage is routed to receiver first mixer V2. The gain of the r-f amplifier is controlled, particularly at high signal input levels, by a voltage fed back to it from the grid of receiver first limiter V111 (par. 35).

b. Receiver First Mixer V2. This stage combines the output of first harmonic amplifier V4 with the amplified output of receiver r-f amplifier V1 to produce the first i. f. in the range of 4.45 to 5.45 mc. The frequency produced depends on the setting of the TENTH MCS control (pars. 12 and 13). The crystal oscillator-harmonic generator and first harmonic amplifier serve both the transmitter and the receiver. Since the output frequency of the first harmonic amplifier is below that to which the receiver-transmitter is tuned (by a frequency between 4.45 and 5.45 mc, depending on the setting of the TENTH MCS control), the first i-f band resulting from the mixing of the incoming signal with the output of the first harmonic amplifier is a band centered about the difference frequency. The plate circuit of mixer V2 is located on the r-f chassis and is tuned by variable i-f tuning capacitor C101.

c. Amplification of First I-f Signal. The difference-frequency band at the output of mixer V2 is amplified in the two-stage, tuned, variable i-f amplifiers, V107 and V108. The variable i-f amplifier stages are tuned by variable i-f tuning capacitor C101.

d. Receiver Second Mixer V109. The output of the variable i-f amplifier (a frequency between 4.45 and 5.45 mc) together with the output of receiver oscillator V101 is combined in receiver second mixer V109. The frequency generated by the oscillator subtracts from the first (variable) i-f signals to produce a second i. f. of 1.4 mc.

e. Receiver Oscillator V101. The free-running, self-excited oscillator, V101, generates a frequency between 3.05 and 4.05 mc depending on the setting of variable i-f tuning capacitor C101. The frequency to which the oscillator is tuned is always 1.4 mc below that to which the variable i-f amplifier is tuned. Thus, if the variable i-f amplifier is tuned to 5 mc, the receiver oscillator is tuned to 5–1.4, or 3.6 mc. This oscillator is temperature-compensated for high stability.

f. Fixed I-f Amplifier and Limiter. The i-f of 1.4 mc is amplified by a three-stage, fixed-tuned amplifier. The first stage, V110, is a conventional i-f amplifier; the second and third stages, V111 and V112, also are designed to function as limiters to eliminate any amplitude variations of the signal. Such amplitude variations represent noise and are undesirable. Proper functioning of the discriminator, which follows the second limiter, requires that the amplitude of the applied signal be uniform despite variations in the level of the incoming signals. A portion of the d-c voltage developed in the grid circuit of the first limiter is combined with a portion of the d-c voltage developed in the grid circuit of the second limiter to provide a bias voltage. This bias is fed to the squelch circuit to provide silencing action as described in *i* below and in paragraph 40. A portion of the d-c grid voltage developed in the

grid circuit of the first limiter also is fed back as agc (automatic gain control) voltage to the grid circuit of r-f amplifier V1, to cause the receiver gain characteristic to be more similar from set to set.

g. Discriminator. The output of second limiter V112 is applied to the discriminator, V113 and V114. The discriminator is a tuned circuit using two type 1A3 diode tubes as rectifiers. The term discriminator is typical for f-m receivers and signifies a circuit which corresponds to the detector in a-m (amplitude-modulated) receivers. The discriminator performs a function analogous to that of the a-m detector in that it extracts the intelligence or audio modulation from the incoming carrier signal. In frequency modulation, the intelligence to be detected appears as variations in frequency (shifts of the carrier from a center frequency) instead of variations in amplitude, therefore, the discriminator is a frequency sensitive, but not an amplitude sensitive device. Thus the discriminator converts the variations from the center frequency of the incoming signal into audio signals.

h. Audio Amplification. The a-f signals that appear at the output of the discriminator are amplified in two separate audio-amplifier circuits.

(1) One circuit is a two-stage audio amplifier, V115 and V116, with gain adjustable by means of panel-mounted VOLUME control R303 (figs. 30 and 31). The output of the first stage, V115, is connected to pins A of each of AUDIO connectors J310 and J311 and to pin E of REC-TR CONTROL connector J312, and is used to provide enough volume to operate a headset or the receiver of a handset. The output of final audio power-amplifier V116 is connected to pins L of each of AUDIO connectors J310 and J311 and to pins F and A of REC-TR CONTROL connector J312 and has sufficient output to drive a loudspeaker.

(2) The other amplifier circuit, a one-stage amplifier, V102, serves to provide an audio-output level for use in system applications (fig. 32). No panel adjustment of volume is provided, however internal potentiometer R103 provides screwdriver adjustment of the gain of the amplifier for the required level. The output of this stage is connected to pin B of REC-TR CONTROL connector J312.

i. Squelch Oscillator V103. It is characteristic of sensitive receivers that in the absence of a received signal, a loud rushing noise is heard in the receiver loudspeaker (or headset). The noise is the result of external electrical disturbances and of thermal agitation in the vacuum tubes and receiver input stage components. A *squelch circuit* is used to suppress this noise during intervals when there is no received signal. In Receiver-Transmitters RT–66/GRC, RT–67/GRC, and RT–68/GRC, the squelch circuit consists of a carrier-switched, 20-kc oscillator and a diode rectifier (both in V103). Squelch action is adjustable by means of panel-mounted SQUELCH control R302. The squelch circuit can be disabled for test purposes or for reception of very weak or fading signals by turning the SQUELCH control to the OFF position.

j. Circuit Differences (figs. 33 through 35).

(1) In all RT–66/GRC models except those bearing Order No. 1759–Phila–51, the gain of receiver r-f amplifier VI is controlled by squelch tube V103 instead of first limiter V11 during squelch operation (*a* and *f* above). Therefore, during squelch operation, the first audio and fixed level audio tubes are cut off, and the r-f amplifier operates at reduced gain.

(2) In RT–66/GRC models bearing Order No. 1759–Phila–51, the gain of receiver r-f amplifier V1 is not controlled by either the squelch tube or the first limiter. The r-f amplifier therefore operates at a slightly negative bias resulting from contact potential and normal grid-leak bias.

(3) In early RT–66/GRC models bearing Order No. 18651–Phila–49, only the d-c voltage developed in the grid circuit of second limiter V112 is applied to the squelch circuit as bias (*f* above).

(4) In RT–66/GRC, RT–67/GRC, and RT–68/GRC models bearing the order and serial numbers listed in the chart below only the d-c voltage developed in the grid circuit of first limiter VIII is applied to the squelch circuit as bias (*f* above).

Model	Order No.	Serial No.
RT–66/GRC	18651–Phila–49	Late models.
	32138–Phila–51	2673 to 2715.
RT–67/GRC	16831–Phila–51	All.
	18651–Phila–49	All.
	32111–Phila–51	1 to 7249.
RT–68/GRC	1759–Phila–51	All.
	16817–Phila–51	9675 and below.
	16821–Phila–51	16667 and below.
	18651–Phila–49	1882 and below.

(5) In the RT–66/GRC models listed in the chart below, a portion of the d-c voltage developed in the grid circuit of first fixed i. f. V110 is combined with a portion of the d-c voltage developed in the grid circuit of first limiter V111 to provide bias for the squelch circuit. This produces more linear squelch action (*f* above).

Order No.	Serial No.
1759–Phila–51	All.
21434–Phila–50	All.
32137–Phila–51	All.
32138–Phila–51	2716 and up.

17. Test Circuits

A number of check points to facilitate testing and alinement of the receiver-transmitter circuits are described below.

a. Meter and Test Switch (fig. 39). The 12-position, panel-mounted METER switch, S301, is used to connect the meter and to arrange the meter circuits as required for determining the continuity of the filament circuit, the voltage at the 85-volt circuit, and the transmitter power output.

b. Receiver Test Socket X200 (fig. 50). Pins on octal socket X200 on the i-f chassis of the receiver-transmitter are connected to pertinent receiver test and adjustment points such as the discriminator output, the second limiter input, etc. Rapid spot checking at test socket X200 of key receiver circuits for test and alinement purposes is made possible without disassembling the panel and chassis assembly.

c. E Test Points. Certain key circuits of the receiver and transmitter that are not picked up by test socket X200 or by the METER switch are wired to feedthrough and standoff terminals within the set, permitting rapid measurement of signal voltages and levels at these points. The receiver first mixer input, the input to the first harmonic amplifier, and the input to some of the transmitter r-f stages are examples of circuits picked up by E points (figs. 79 through 82). Four-prong socket J3 on the r-f chassis (fig. 5) provides test points for the final stages of the transmitter.

18. Stage Analysis

Detailed descriptions of the stages of Receiver-Transmitter RT–68/GRC are given in paragraphs 19 through 46. These descriptions also apply to Receiver-Transmitters RT–66/GRC and RT–67/GRC unless otherwise stated at the end of each paragraph. Schematics for the three sets are shown in figures 79 through 82.

19. Microphone Input Circuit (fig. 13)

a. Three parallel input connections are provided for the carbon button of the microphone or some other source of audio modulation. One connection is at terminals C and D (ground) of REC-TR CONTROL connector J312 and the other two at terminals C and E (ground) of each of AUDIO connectors J311 and J310. The microphone circuit extends through contacts of DIAL LIGHT OFF-ON-RING switch S302 and through chassis connectors P306 and J106 (terminals 12) to the 150-ohm primary winding (terminals 6–7) of microphone transformer T106. The ground return path for the audio signals is completed through bypass capacitor C144A. The output of the 1,600-cps (cycle per second) oscillator (par. 28) is fed to the other primary winding (terminals 4–5) of microphone transformer T106.

b. D-c voltage for energizing the carbon button of the microphone is applied from an external 6.3-volt source to terminals N and D (ground) of POWER IN connector J309. The microphone d-c supply circuit extends from terminal N of J309, through terminals 13 of i-f chassis connectors P306 and J106, over the normally open contact pair 5–4 of control relay O101 (par 41), and through filter choke L137 to terminal 7 of

T106. Choke L137 and capacitors C144A and C301 serve to filter a-c ripple and vibrator hash from the power supply. Resistor R130 and choke L137 act as a voltage divider to provide the proper voltage to the microphone circuit.

c. Contacts 5–4 of relay O101 (par. 41) close, and apply microphone energizing voltage, when the microphone push-to-talk button is closed or when some other external circuit arrangement completes the ground return for the coil of relay O101. The signal voltage developed across winding 6–7 or 4–5 of T106 is induced into secondary winding 1–2–3 for application to the reactance modulator, V105 and V106 (par. 21).

20. Transmitter Oscillator V104A

(fig. 13)

a. The self-excited 4.45- to 5.45-mc oscillator uses one section of the twin-triode tube type 3A5, V104A, in a modified Hartley circuit. Plate coil L109 and grid coil L110 form the conventional Hartley inductive voltage-dividing circuit. The grid (pin 5) is coupled through capacitor C129 to the oscillator tank circuit. R114 establishes the d-c return path for the grid and provides grid-leak bias for operation of the oscillator triode. Regenerative feedback from plate to grid, necessary to sustain oscillations, is provided by induction from plate coil L109 to grid coil L110 and by the voltage developed across L110 by oscillatory current through the tank circuit.

b. The nominal or center frequency generated by the oscillator is determined by the tuning of the parallel resonant circuit, consisting of coils L109 and L110, capacitor C101C (controlled by the TENTH MCS control), shunt and series padding capacitors C124 and C123, respectively, and trimmer capacitor C101D. The padder capacitors serve to facilitate tracking of the oscillator with the tuned circuit of the receiver variable i-f amplifier. The center frequency is set during alinement by the adjustment of variable trimmer capacitor C101D and of the inductance of coils L109 and L110 while no audio signal is present in the circuit.

c. The tuned plate circuit of the oscillator is shunted by the series arrangement of resistor R115, blocking capacitor C130, and coils L112 and L113 in parallel. The two coils are the primary windings of the powdered iron core transformer in T104, which links the oscillator with the reactance modulator. For a particular setting of i-f tuning capacitor C101 (selected during operation by means of the TENTH MCS control), the frequency of oscillations is determined by the total instantaneous inductive reactance of the oscillator tank circuit. However, coils L112 and L113 contribute to the oscillator tuning. Paragraph 21 contains an explanation of how coils L112 and L113 are made to affect the oscillator frequency in proportion to the a-f signal.

d. The series arrangement of capacitors C125 and C126 acts as a voltage divider across the resonant circuit of the oscillator. A portion of the oscillator output, taken at the junction of these two capacitors, is fed through capacitor C122 and interchassis coaxial connector J102 for application to transmitter mixer stage 6V.

e. Plate voltage is fed from the external 85-volt supply through contacts 9–8 (normally open) of relay O101, filter choke L111, and plate coil L109 to the plate (pin 6) of V104A. Capacitors C127 and C128 bypass the d-c plate supply for r-f voltages. Refer to paragraph 42 for filament circuit arrangements.

f. Most of the components in the tuned circuit of the oscillator are inclosed. The assembly is identified on the schematic diagram as T103. Included in the assembly are tuning coils L109 and L110, shunt padder C124, voltage-divider capacitors C125 and C126, plate supply choke L111, and bypass capacitor C127. The iron slug for adjusting L109 and L110 is accessible through the cover of T103.

21. Modulation

(*fig. 13 located in back of manual*)

a. Frequency modulation causes the center or carrier frequency of the transmitter oscillator (par. 20) to be shifted in frequency in proportion to the audio signals from the microphone or ringing circuit. The amplitude variations of the audio signals become changes or deviations in the frequency of the carrier from center value, while the frequency of the audio signals becomes the rate at which the frequency of the carrier changes.

b. In the receiver-transmitter, frequency modulation is produced by a balanced reactance tube modulator consisting of tubes V105 and V106 and their associated components. The components in this circuit are arranged so that the current through the tubes leads or lags the voltage across them by almost 90°. These voltage and current relationships are characteristic of a capacitor and

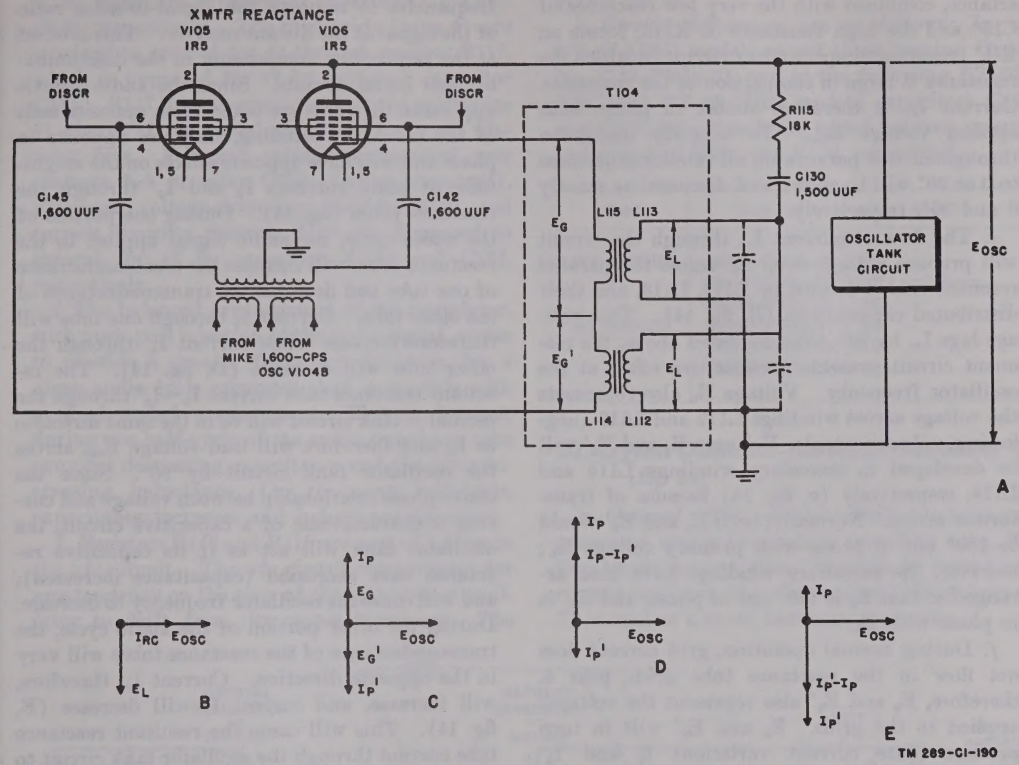

Figure 14. Reactance modulator, operation, vector diagrams.

inductor, respectively. The modulator tubes are placed across the tank circuit of transmitter oscillator V104A, and when an audio signal is applied, they change the oscillator frequency in a manner similar to the variation of a capacitor or inductor in the tank circuit. The amount and rate of frequency change are determined by the magnitude and rate of change of current through the modulator tubes. This current is controlled by an audio signal applied to the grids, pins 6, of the modulator tubes. When no audio signal is applied, the modulator has no effect on the frequency of the oscillator.

c. Two parallel primary windings L112 and L113 of T104 are connected across the tank circuit of the oscillator through capacitor C130 and resistor R115. These windings are self-resonant at approximately 2 mc and operate in conjunction with C130, R115, and secondary windings L114 and L115 of T104, to produce the 90° relationship between voltage and current in the modulator tubes. The relationships between voltages and currents in the above components, when no audio signals are applied, are shown in B and C, figure 14, and are discussed in *d* through *f* below. The above relationships, when an audio signal is applied, are shown in D, figure 14, and are discussed in *g* below.

d. Voltage E_{osc}, developed in the oscillator tank circuit, is applied across the circuit consisting of L112, L113, C130, and R115 (A, fig. 14). This voltage causes current I_{rc}, to flow through the circuit. Windings L112 and L113 are self-resonant at approximately 2 mc, and are shown as parallel resonant circuits. The dotted capacitors across the windings represent the capacity between the turns of the windings (distributed capacitance). Since the frequency of voltage E_{osc} is much higher than 2 mc (4.45 mc to 5.45 mc), current I_{rc} flowing through the resonant circuit will encounter a ca-

pacitive circuit having a low reactance. This reactance, combined with the very low reactance of C130 and the high resistance of R115, forms an R–C (resistance-capacitance) circuit in which the resistance is large in comparison to the reactance. Current I_{rc} is therefore almost in phase with applied voltage E_{osc}. To simplify discussion throughout this paragraph, all relationships close to 0 or 90° will be shown and discussed as exactly 0 and 90°, respectively.

e. The flow of current I_{rc} through the circuit will produce voltage drop E_L across the parallel resonant circuit formed by L112, L113, and their distributed capacitances (B, fig. 14). This voltage lags I_{rc} by 90°, since as stated above, the resonant circuit presents a capacitive effect at the oscillator frequency. Voltage E_L also represents the voltage across windings L112 and L113 (neglecting coil resistance). Voltages E_g and E_g' will be developed in secondary windings L115 and L114, respectively (c, fig. 14) because of transformer action. Normally, both E_g and E_g' would be 180° out of phase with primary voltage E_L; however, the secondary windings have been arranged so that E_g is 180° out of phase, and E_g' is in phase with E_L.

f. During normal operation, grid current does not flow in the reactance tube grids, pins 4, therefore, E_g and E_g' also represent the voltages applied to the grids. E_g and E_g' will in turn produce plate current variations I_p and I_p' (through the reactance tubes) which are in phase with voltage E_g and E_g', respectively. Note that plate current I_p, through one reactance tube, leads voltage E_{osc}, which is across it by 90° while plate current I_p' through the other reactance tube lags voltage E_{osc} (across it) by 90°. The tubes therefore act as capacitive and inductive reactances, respectively. The reactance tube circuit has been designed so that under the above conditions, currents I_p and I_p' are equal. Since both currents are equal and opposite in direction, the total current variation through the tank circuit of the oscillator (because of the reactance tubes) is zero. The reactance tubes, under the above conditions, have no effect on the frequency of the oscillator.

g. Audio signals are applied to the signal grids, pins 6, of the reactance tubes through terminal C of J311, contacts of switch S302, terminals 12 of P306 and J106, primary and secondary windings 6–7 and 1–2–3, respectively of T106, and capacitors C142 and C145 (fig. 13). C142 and C145 function to increase deviation at the higher audio frequencies to improve the signal-to-noise ratio of the signal at the distant receiver. This is offset at the receiver by components in the discriminator and audio circuits. Since the audio signals applied to the grids are taken from opposite ends of the secondary winding, they are opposite in phase and will have opposite effects on the magnitude of plate currents I_p and I_p' through the reactance tubes (fig. 14). During one portion of the audio cycle, the audio signal applied to the reactance tubes will increase the transconductance of one tube and decrease the transconductance of the other tube. Current I_p through one tube will therefore increase while current I_p' through the other tube will decrease (D, fig. 14). The resultant reactance tube current $I_p - I_p'$ through the oscillator tank circuit will be in the same direction as I_p, and therefore will lead voltage E_{osc} across the oscillator tank circuit by 90°. Since the above phase relationship between voltage and current is characteristic of a capacitive circuit, the oscillator tank will act as if its capacitive reactance were decreased (capacitance increased), and will cause the oscillator frequency to decrease. During the other portion of the audio cycle, the transconductance of the reactance tubes will vary in the opposite direction. Current I_p' therefore, will increase, and current I_p will decrease (E, fig. 14). This will cause the resultant reactance tube current through the oscillator tank circuit to be in the same direction as I_p', and therefore it will lag voltage E_{osc} across the tank circuit by 90°. Since this phase relationship between voltage and current is characteristic of an inductive circuit, the oscillator tank circuit will act as if its inductive reactance were decreased (inductance decreased) and will cause the oscillator frequency to increase. As the audio signal varies through each cycle, the oscillator frequency will alternately increase and decrease in frequency at a rate determined by the frequency of the audio signal. The amount of frequency variation will be determined by the instantaneous magnitude of the audio signal.

h. Plate voltage for the reactance modulator tubes is supplied through contacts 9–8 of relay O101 (when energized) from the external 85-volt supply (fig. 13). The plate supply circuit includes filter choke L111, bypass capacitor C127, and the plate winding of transmitter oscillator tuning coil L109. Screen voltage is supplied

through voltage-dropping resistors R119 and R120, which are bypassed by capacitors C133 and C132, respectively. The first grids (pins 4) are returned to ground for dc through resistor R117, which is bypassed for rf by grid-leak capacitor C131. R117 limits current through the grid (pins 4) circuit if the signal exceeds the normal filament bias. Filament voltage is supplied over contacts 5–4 of relay O101 (when energized). Filament voltage-dropping resistor R122 and current limiting resistor R123 are bypassed to ground for rf by capacitors C134 and C135, respectively.

i. The balanced arrangement of the modulator, with push-pull injection of the audio signal, serves to provide a greater frequency deviation for a given audio cycle excursion than is possible with a single-ended arrangement. This is because, during one half-cycle of the audio signal one tube provides decreasing capacitance and the other increasing inductance. On the next half-cycle, capacitance increases and inductance decreases.

j. Resistors R116 and R118 are part of a filter in the afc circuit. The afc circuit compensates for any tendency on the part of the transmitter oscillator to drift from its center frequency. The function of R116 and R118 is described in paragraph 36*i*(3).

k. Circuit differences are as follows: In all RT–67/GRC models except those bearing Order No. 1759–Phila–51, and in the following RT–66/GRC and RT–68/GRC models, capacitors C137 and C138, 24 $\mu\mu$f each are added between ground and pins 6 of V105 and V106, respectively.

Model	Order No.	Serial No.
RT–66/GRC	18651–Phila–49	All.
	32137–Phila–51	7074 and down.
	32138–Phila–51	All.
RT–68/GRC	18651–Phila–49	All.
	16817–Phila–51	All.
	16821–Phila–51	All.

22. Crystal Oscillator-Harmonic Generator V3 (fig. 15)

a. General. The crystal oscillator-harmonic generator uses a twin-triode type 3A5 tube, V3. One triode section (pins 1 through 4) is used as a crystal oscillator; the other section (pins 4 through 7) is used as a tuned harmonic generator.

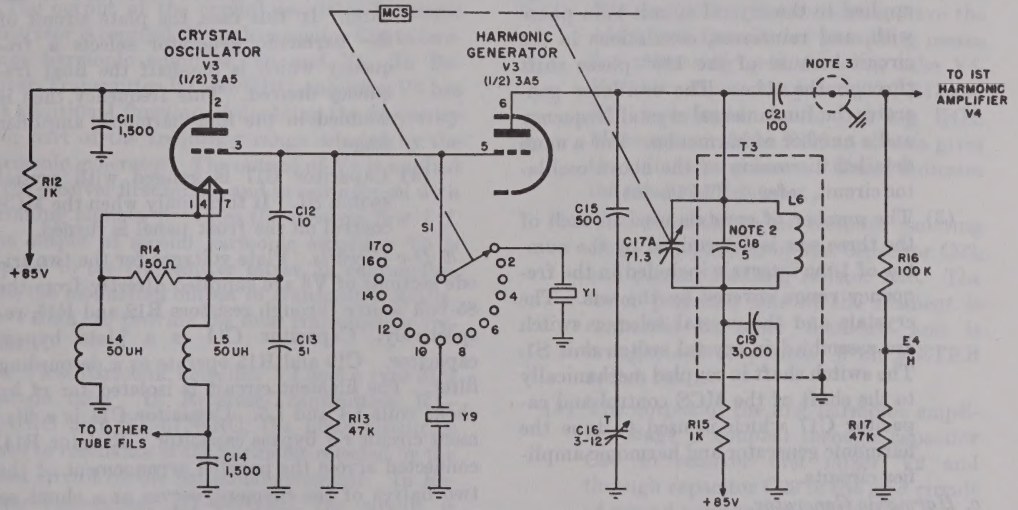

NOTES:

1. SEE THE APPROPRIATE MAIN SCHEMATIC DIAGRAM FOR EXACT VALUE OF RESISTOR R13.
2. CAPACITOR C18 IS NOT USED IN RT-66/GRC MODELS.
3. COAX CABLE IS USED IN RT-68/GRC MODELS ONLY.
4. UNLESS OTHERWISE SHOWN, CAPACITORS ARE IN UUF.

TM 289-CI-191

Figure 15. Crystal oscillator-harmonic generator, functional diagram.

b. Crystal Oscillator.

(1) The oscillator uses a series of crystals in a modified Pierce oscillator circuit. The interelectrode capacitance between grid and filament and plate and filament, which are normally used in the Pierce oscillator as a voltage divider across the crystal, are supplemented by capacitors C12 and C13, respectively ((2) below). The capacitors have only a small effect on the frequency of the oscillator. Capacitor C11 connects the plate, pin 2, to one side of the crystal circuit through ground; the other side of the crystal circuit is connected directly to the grid, pin 3. The junction of capacitors C12 and C13 is connected directly to the filament center tap, pin 4.

(2) Regenerative feedback voltage from the plate to the grid is developed across capacitor C12 by oscillatory current from the crystal. The amount of feedback is determined by the ratio of capacitors C12 and C13. The feedback voltage across C12 is amplified and applied to the plate end of the crystal circuit. The phase of the amplified feedback voltage applied to the crystal circuit is in phase with, and reinforces, oscillations in the circuit because of the 180° phase shift through the tube. The oscillator generates the fundamental crystal frequency and a number of harmonics. For a more detailed discussion of the above oscillator circuit, refer to TM 11–665.

(3) The number of crystals used in each of the three sets is determined by the number of 1-mc intervals included in the frequency range covered by the sets. The crystals and the crystal selector switch are assembled in crystal switch unit S1. The switch shaft is coupled mechanically to the shaft of the MCS control and capacitor C17 which is used to tune the harmonic generator and harmonic amplifier circuits.

c. Harmonic Generator.

(1) The crystal oscillator output is taken from across load resistor R13 in the grid return circuit and is applied directly to the grid of the harmonic generator triode. The plate circuit of the harmonic generator is tuned to resonance at a harmonic of the crystal frequency by the parallel circuit consisting of coil L6 and section A of tuning capacitor C17. The resonant circuit is returned to ground through bypass capacitor C19. Padder capacitor C15 and variable trimmer capacitor C16 serve to adjust the tracking. The inductance of L6 is adjustable by means of the powdered iron core. Fixed trimmer capacitor C18 changes the total capacity in the tuned circuit for Receiver-Transmitters RT–67/GRC and RT–68/GRC to facilitate tracking of capacitor C17.

(2) Table I lists the crystal frequencies, and table II lists the corresponding harmonic frequencies used for each of the three receiver - transmitters. In Receiver-Transmitters RT–66/GRC and RT–67/GRC, the plate circuit of the harmonic generator is tuned to the harmonic of the crystal which corresponds to the final frequency required at the grid of receiver mixer tube V2. In Receiver-Transmitter RT–68/GRC, a higher order of crystal harmonic is required over part of the band. In this case, the plate circuit of the harmonic generator selects a frequency which is one-half the final frequency desired. This frequency then is doubled in the first harmonic amplifier stage.

(3) Capacitor C17 is ganged with crystal switch S1. It turns only when the MCS control on the front panel is turned.

d. D-c Circuits. Plate voltages for the two triode sections of V3 are supplied directly from the 85-volt source through resistors R12 and R15, respectively. Capacitor C11 is a plate bypass capacitor. C19 and R15 operate as a decoupling filter. The filament circuit is isolated for rf by choke coils L4 and L5. Capacitor C14 is a filament circuit r-f bypass capacitor. Resistor R14, connected across the parallel arrangement of the two halves of the filament, serves as a shunt so that the current through the filaments will be the correct value.

e. Circuit Differences.

(1) In RT–66/GRC models, capacitor C18 is not used.

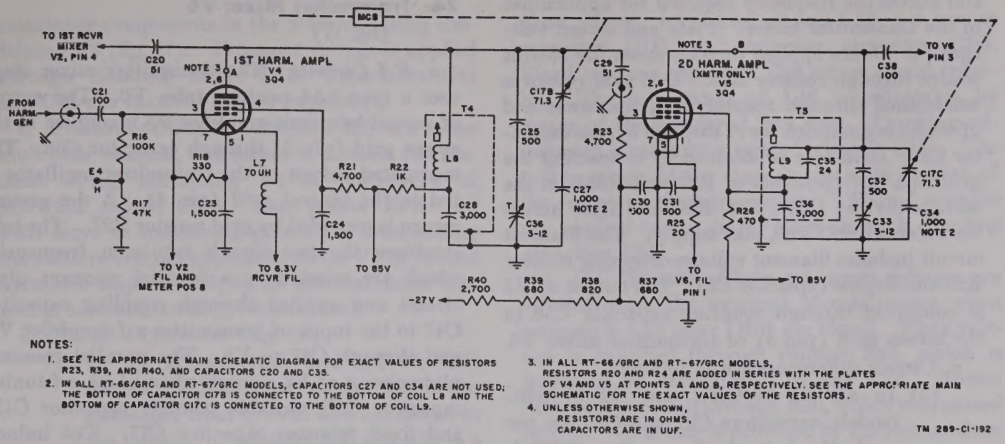

NOTES:

1. SEE THE APPROPRIATE MAIN SCHEMATIC DIAGRAM FOR EXACT VALUES OF RESISTORS R23, R39, AND R40, AND CAPACITORS C20 AND C35.
2. IN ALL RT-66/GRC AND RT-67/GRC MODELS, CAPACITORS C27 AND C34 ARE NOT USED; THE BOTTOM OF CAPACITOR C17B IS CONNECTED TO THE BOTTOM OF COIL L8 AND THE BOTTOM OF CAPACITOR C17C IS CONNECTED TO THE BOTTOM OF COIL L9.
3. IN ALL RT-66/GRC AND RT-67/GRC MODELS, RESISTORS R20 AND R24 ARE ADDED IN SERIES WITH THE PLATES OF V4 AND V5 AT POINTS A AND B, RESPECTIVELY. SEE THE APPROPRIATE MAIN SCHEMATIC FOR THE EXACT VALUES OF THE RESISTORS.
4. UNLESS OTHERWISE SHOWN, RESISTORS ARE IN OHMS, CAPACITORS ARE IN UUF.

TM 289-CI-192

Figure 16. Harmonic amplifier, functional diagram.

(2) Coaxial cable between the output of harmonic generator V3 and the input of first harmonic amplifier is used in RT–68/GRC models only.

23. Harmonic Amplifiers V4 and V5 (fig. 16)

The output of the crystal oscillator-harmonic generator is coupled through capacitor C21 to two-stage harmonic amplifier, V4 and V5. In Receiver-Transmitter RT–68/GRC, amplifier V4 has the additional function of doubling the frequency over part of the frequency range selected by the harmonic generator. The output of V4 is applied to the receiver first mixer, and in conjunction with incoming signals, provides the receiver first i. f. The output of second harmonic amplifier V5 is applied to the transmitter mixer, in conjunction with the modulated output of transmitter oscillator V104A, to provide the final transmission frequency.

a. First harmonic amplifier V4 uses a type 3Q4 pentode tube. In Receiver-Transmitters RT–66/GRC and RT–67/GRC, the plate circuit is tuned to resonance at the harmonic selected by the tuned circuit of the harmonic generator. In Receiver-Transmitter RT–68/GRC, the circuit is tuned to twice that frequency over part of the band. The tuned circuit consists of coil L8, tuning capacitor C17B, padder capacitors C25 and C27, and trimmer capacitor C26. The padder capacitors are required for tracking.

(1) Plate and screen voltages are applied to the stage from the 85-volt source through resistors R22 and R21, respectively. These resistors are bypassed to ground for rf through bypass capacitors C28 and C24, respectively.

(2) The grid return circuit includes resistors R16 and R17. These resistors have the additional function of providing means for measuring grid drive on tube V4. For this purpose, the junction of R17 and R16 is brought out to test lug E4H. Measurement from E4H to chassis gives the voltage drop across R17 and indicates the relative grid drive.

(3) The filament circuit includes isolating choke L7, filament bypass capacitor C23, and current limiting resistor R18. The lower potential side of the filament is connected to other filaments and is brought out to position 8 on METER switch S301.

(4) The output of the first harmonic amplifier stage is coupled through capacitor C20 to receiver first mixer V2 and through capacitor C29 to the grid circuit of second harmonic amplifier V5.

b. Second harmonic amplifier V5 uses a type 3Q4 pentode tube. The plate circuit of V5 includes coil L9, tuning capacitor C17C, trimmer capacitors C33 and C35, and padder capacitors C32 and C34. The circuit is tuned to resonance

and selects the frequency required for application to the transmitter mixer. Plate and screen voltages for V5 are applied directly from the 85-volt source through resistor R26. D-C grid return is established through resistor R23, the lower end of which is grounded for rf through bypass capacitor C30. Grid bias is obtained by connecting the grid to a tap (junction of R37 and R38) on the voltage divider (R37, R38, R39, and R40) across the external −27-volt bias supply. The filament circuit includes filament voltage-dropping resistor R25 and bypass capacitor C31. The output of V5 is connected through coupling capacitor C38 to the screen grid (pin 3) of transmitter mixer V6.

c. Circuit differences are as follows:

(1) In all RT–66/GRC and RT–67/GRC models, capacitors C27 and C34 are not used; the bottom of capacitor C17B is connected to the bottom of coil L8; and the bottom of capacitor C17C is connected to the bottom of coil L9. C17B and C17C therefore are placed directly across coils L8 and L9, respectively, and do not have padder capacitors C27 and C34 in series with them (*a* above).

(2) In all RT–66/GRC and RT–67/GRC models, resistors R20 and R24 are added in series with the plates of V4 and V5, respectively. R20 and R24 are used to suppress parasitic oscillations.

24. Transmitter Mixer V6 (fig. 17)

a. R-f Circuits. The transmitter mixer stage uses a type 3A4 pentode tube, V6. The output of second harmonic amplifier V5 is coupled to the screen grid (pin 3) through capacitor C38. The modulated output of the transmitter oscillator is fed to the control grid (pin 4). A d-c ground return is provided by grid resistor R27. The tube combines the two signals into sum frequencies which are selected by a parallel resonant plate circuit and applied through coupling capacitor C47 to the input of transmitter r-f amplifier V7, and through C48 to V8. The parallel resonant plate circuit of V6 consists of coil L12, r-f tuning capacitor C1F, variable trimmer capacitor C1E, and fixed trimmer capacitor C77. The inductance of L12 is adjustable by means of a powdered iron core. Tuning of the resonant circuit also may be adjusted for tracking by means of C1E. The tuning range of the resonant circuit corresponds to that of the receiver-transmitter.

b. D-c Circuits. Plate and screen voltages are applied from the external 85-volt supply through contacts 9–8 of relay Q101 (when energized). R31 and C45 are the plate circuit decoupling resistor and r-f bypass capacitor, respectively. R29 and C44 are the screen grid voltage-dropping resistor and r-f bypass capacitor, respectively. Fixed grid bias is provided by the voltage drop across the

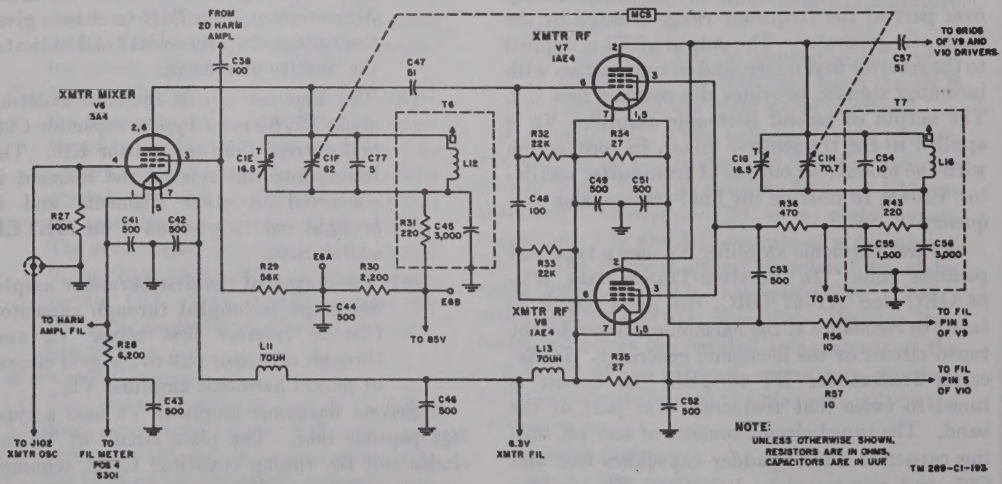

Figure 17. Transmitter mixer and r-f amplifier, functional diagram for RT–68/GRC models.

remaining components in the filament string containing V6 (fig. 37). Filament voltage is applied through isolating choke L11. Capacitors C41 and C42 are filament bypass capacitors.

c. Measuring Circuits. Resistor R28 is a meter multiplier resistor, and serves to connect the filament string containing V6 to position 4 of METER switch S301. Test points E6A and E6B serve as measuring points for determining the relative voltage applied to mixer V6 by second harmonic amplifier V5, by an external meter connected across measuring resistor R30.

d. Circuit Differences (fig. 18).

(1) In all RT–66/GRC and RT–67/GRC models, the bottom of resistor R27 is disconnected from ground and connected to the junction of resistors R38 and R39 in a voltage divider placed between the −27-volt transmitter supply and ground. The divider resistors from ground to the supply are— R37, R38, R39, and R40. Grid bias therefore is provided by a combination voltage consisting of the voltage drops across resistors R37 and R38, and the voltage developed across the remaining filaments and components in the ground end of the filament string containing the filament of V6 (*b* above).

(2) In all RT–66/GRC and RT–67/GRC models, capacitor C40 is connected between the bottom of resistor R27 and ground. C40 acts in conjunction with R27 to provide a ground return for rf for the grid circuit, pin 4 of V6.

(3) In early RT–66/GRC models bearing Order No. 18651-Phila-49, capacitor C39 is connected between the grid, pin 4, of V6 and ground.

25. Transmitter R-f Amplifier, V7 and V8 (fig. 17)

The transmitter r-f amplifier stage uses two type 1AE4 pentode tubes, V7 and V8, connected in parallel and operating class B. The plates (pins 2) and the screen grids (pins 3) of these tubes are connected in parallel.

a. R-F Circuits. The output of mixer stage V6 is applied through coupling capacitor C47 to the grid of V7 and through d-c blocking capacitor C48 to the grid of V8. The amplified output of the stage is developed across the parallel resonant plate circuit, consisting of coil L16, r-f tuning capacitor C1H, and trimmer capacitor C1G. Fixed trimmer capacitor C54 serves to aid tracking. The inductance of L16 is adjustable by means of the powdered iron core. Tracking adjustment is made by means of trimmer C1G. The tuning range of the stage is the same as that of the overall receiver-transmitter. The r-f voltages are applied to the driver stage through coupling capacitor C57.

b. D-C Circuits. Plate and screen voltages are applied from the external 85-volt source when contacts 9–8 of relay O101 are closed. Plate voltage is supplied through resistor R43, which is bypassed by capacitors C55 and C56. Screen voltage is supplied through R36, which is bypassed by C53. Grid bias is provided by the voltage drop across the filaments of the remaining tubes in the filament strings (fig. 37). Resistors R32 and R33 return the grids of the tubes to the filaments for that purpose. Ground return for r-f voltages is provided by C49. Filament voltage is applied through the filter consisting of isolating choke L13 and bypass capacitor C49. Resistors R34 and R35 (across the tube filaments) limit the filament currents to their proper values. The filaments are bypassed to ground for r-f voltages by capacitors C49, C51, and C52.

c. Mechanical Arrangement. For shielding purposes, coil L16, trimmer C54, plate supply resistor R43, and bypass capacitors C55 and C56 are mounted in a common can, T7, with a removable cover. The tuning slug of L16 is accessible through a hole in the brace (fig. 7).

d. Circuit Differences (fig. 18).

(1) In all RT–66/GRC models, resistors R32 and R33 are returned to ground instead of to the filaments of V7 and V8, respectively. Therefore, bias is developed across the filaments of all the tubes in the filament strings containing V7 and V8 (fig. 37).

(2) In the following models, coils L14 and L15 are used in place of resistors R56 and R57, respectively.

Model	Order No.	Serial No.
RT–66/GRC	18651–Phila–49	All.
	32137–Phila–51	All.
	32138–Phila–51	All.
RT–67/GRC	16831–Phila–51	All.
	18651–Phila–49	All.

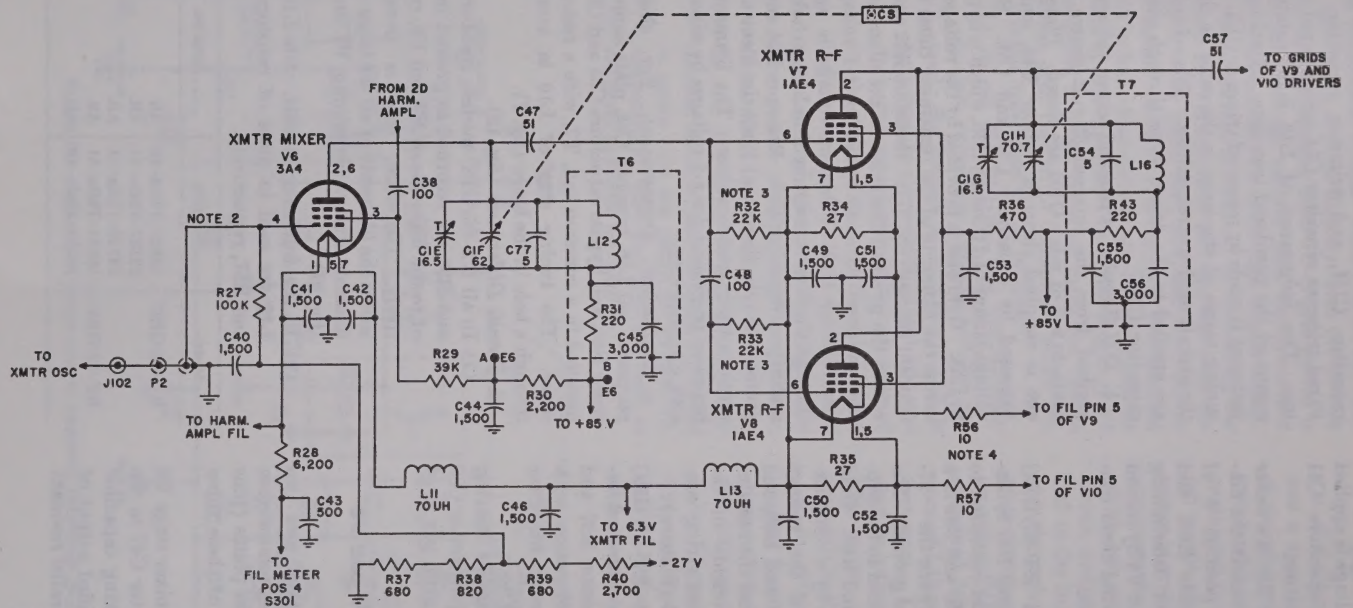

NOTES:

1. SEE THE APPROPRIATE MAIN SCHEMATIC DIAGRAM FOR EXACT VALUES OF RESISTORS R39 AND R40.
2. IN EARLY RT-66/GRC MODELS BEARING ORDER NO. 18651-PHILA-49, CAPACITOR C39, 10 UUF, IS CONNECTED BETWEEN THE GRID, PIN 4 OF V6, AND GROUND.
3. IN ALL RT-66/GRC MODELS, RESISTORS R32 AND R33 ARE RETURNED TO GROUND INSTEAD OF TO THE FILAMENTS OF V7 AND V8, RESPECTIVELY.
4. IN THE FOLLOWING MODELS, COILS L14 AND L15, 5.3 UH EACH, ARE USED IN PLACE OF RESISTORS R56 AND R57, RESPECTIVELY;

MODEL	ORDER NO.	SERIAL NO.
RT-66/GRC	18651-PHILA-49	ALL
	32137-PHILA-51	ALL
	32138-PHILA-51	ALL
RT-67/GRC	16831-PHILA-51	ALL
	18651-PHILA-51	ALL

5. UNLESS OTHERWISE SHOWN, RESISTORS ARE IN OHMS, CAPACITORS ARE IN UUF.

TM 289-CI-217

Figure 18. Transmitter mixer and r-f amplifier, functional diagram for RT-66/GRC and RT-67/GRC models.

(3) In all RT–66/GRC and RT–67/GRC models, capacitor C50 is connected between ground and the junction of resistors R35 and L13. C50 aids in placing pins 7 at r-f ground.

(4) In all RT–66/GRC and RT–67/GRC models, capacitor C53 is returned to ground instead of to the filament, pins 1–5 of V7.

26. Transmitter Drivers V9 and V10

(fig. 19)

a. R-F Circuits. The transmitter driver stage uses two type 3B4 pentode tubes, V9 and V10, in parallel. The control grid (pin 3), the screen grid (pin 1), and the plate (pin 7) of one tube are connected directly to the corresponding elements of the other tube. The output of the transmitter r-f amplifier stage is coupled through capacitor C57 to the grids (pins 3) of the tubes. The signal voltage is taken off across grid resistor R42. Resistor R41 provides a means for measuring the grid drive of V9 and V10; it is bypassed by C58 and C59. The measuring points are two feedthrough insulators, E7B and E8G, one on each side of R41. The voltage across this resistor may be measured by means of an external meter. The plate circuit is tuned to resonance at the dial frequency by the parallel resonant circuit composed of coil L18, r-f tuning capacitor C1J, and trimmer capacitors C1K and C81. Tracking may be adjusted by means of the powdered iron core of coil L18 and also by means of trimmer capacitor C1K. The series arrangement of coil L17 (closely coupled to coil L18) and variable capacitor C65, connected from the junction of R49 and the parallel resonant circuit to the grids of the tubes, is a neutralizing circuit which serves to balance out the grid-to-plate capacity of the tubes and thereby prevents oscillatory feedback through the interelectrode capacity. The output of the transmitter driver is coupled to transmitter power amplifier stage V11 through coupling capacitor C67.

b. D-C Circuits. Plate and screen voltages are supplied from the 150-volt external source through resistors R49 and R46, respectively, when contacts 6–7 of relay O1 are closed. The resistors are bypassed by capacitors C62, C66, C68. Fixed grid bias is obtained by connecting the grids through d-c return resistor R42 and measuring resistor R41 to the tap (junction of R39 and R40) on the voltage divider (R37, R38, R39, and R40) which is across the external −27-volt bias supply. Capacitor C58 bypasses the bias supply for rf. The filaments of V9 and V10 are in series with the filaments of V7 and V8, respectively, and are energized when contacts 4–5 of relay O101 are closed (fig. 37). Multiplier resistors R47 and R48 extend the series strings of filaments, which include the filaments of V9 and V10, to positions 2 and 3, respectively, of METER switch S301. Capacitors C60 and C61 are filament bypass capacitors.

c. Neutralizing. The neutralizing circuit, L17 and C65, establishes negative voltage feedback from the plates to the grids of the tubes. Feedback is used to cancel out any tendency of the tube to break into oscillations because of internal coupling through the interelectrode capacity of the tubes. This arrangement serves to provide for stable operation of this relatively high-power stage.

d. Mechanical Arrangement. Tuning coil L18, neutralizing coil L17, resistor R49, neutralizing capacitor C65, and bypass capacitors C66 and C68 are mounted in a common can, T8. The location of the tuning adjustments for L18 and C65 are shown in figure 7.

e. Circuit Differences. In RT–66/GRC and RT–67/GRC models, capacitor C81 is not used (*a* above).

27. Transmitter Power Amplifier V11

(*fig. 19 located in back of manual*)

a. R-F Circuits. The output stage (power amplifier) of the transmitter uses a type 2E24 pentode tube, V11, operating class C. Grid drive, obtained from the output of the driver stage through coupling capacitor C67, is developed across resistor R51. The plate circuit is tuned by the parallel resonant circuit consisting of coil L22, r-f tuning capacitor C1L, trimmer capacitor C1M, and series padder capacitor C80. C80 serves to facilitate tracking. The signal voltage developed across this circuit is coupled inductively to the tuned antenna circuit consisting of coil L23 and variable capacitor C74. The amount of coupling between the antenna circuit and the power-amplifier tank is adjustable from the front panel by means of the TRANS ANT COUPLING control, which moves L23 closer to or farther from L22 as required. Tracking is adjusted by trimmer capacitor C1M. TR ANT TUNE capacitor C74 tunes

the antenna circuit as required for matching the antenna proper to the transmitter output circuits. This capacitor is rotated by a cam arrangement (par. 13). When energized, relay O301 connects the antenna to the transmitter. When the relay is de-energized it connects the antenna to the receiver.

b. D-C Circuits. Plate voltage is fed to the tube from the external 450-volt supply through measuring resistor R53 and through filter coil L21; the plate circuit is bypassed by capacitor C73. Screen voltage is fed from the external 250-volt supply over contacts 4–5 of relay O1 (when energized) and through resistor R52, which is bypassed by capacitor C72. Capacitor C78 joins contacts 5 and 3 of relay O1, thereby associating the screen supply circuit for V11 with the grid of first audio-amplifier stage V115. Capacitor C78 forms part of a time-delay circuit. This arrangement is used to apply cutoff bias to audio amplifiers V102 and V115 during the transition period from the transmitting to the receiving conditions of the set, before the squelch oscillator has had sufficient time to warm up and build up its oscillations sufficiently to apply normal squelch cutoff bias to the audio tubes. The function of this arrangement is described in paragraph 40*e*. The filament supply circuit is bypassed for rf by capacitor C71. D-c grid bias is taken from the external −27-volt bias supply through grid resistors R50 and R51. The combination of grid-leak resistor R51 and bypass capacitor C70 serves to separate the rf from the d-c paths.

c. Metering. Resistor R50 provides means for measuring the grid drive applied to the power-amplifier stage. Grid drive is taken in terms of the d-c voltage drop across R50. For this purpose, test points E9G and E9F, one on each side of the resistor, are brought out to terminals A of test socket J3 (fig. 43). Power-amplifier plate current readings are taken in terms of the voltage drop across measuring resistor R53. Test points E9J and E9H, one on each side of the resistor, are brought out to terminals B of J3 (fig. 43). The RF position on METER switch S301 is used to determine the presence of power-amplifier output across the antenna circuit (par. 44).

d. Circuit Differences.

(1) In all RT–66/GRC and RT–67/GRC models, padder capacitor C80 is replaced with a wire strap. In all RT–66/GRC models except early models bearing Order No. 18651-Phila-49, and in all RT–67/GRC models, trimmer capacitor C79 is added across coil L22 to obtain the proper tracking range (*a* above).

(2) In all RT–66/GRC models except those bearing Order No. 1759–Phila–51, and in the RT–67/GRC models listed in the chart below, capacitor C78 is associated with squelch diode V103 output circuit instead of directly with the grid of first audio amplifier V115 (*b* above).

Order No.	Serial No.
16831–Phila–51	All.
18651–Phila–49	All.
32111–Phila–51	1–13671.

(3) In all RT–66/GRC models except those bearing Order No. 1759–Phila–51, capacitor C78 performs the additional function of reducing the gain of receiver r-f amplifier V1 during the transition periods from transmit to receive conditions (*b* above). In early RT–66/GRC models bearing Order No. 18651–Phila–49, C78 is not used.

(4) In all RT–66/GRC models except early models bearing Order No. 18651–Phila–49, coil L24 is added in series (inside the can) with the upper end of coil L23. In all RT–66/GRC models, capacitor C75 is replaced with a wire strap. L24 serves to facilitate impedance matching between the transmitter output circuit and the antenna.

(5) In all RT–66/GRC models except those bearing Order No. 1759–Phila–51 and 32137–Phila–51, serial No. 6839 and down, coil L20 is added in series with the filament lead from pin 2 of V11. L20 aids in isolating the filament of V11 from the 6.3-volt filament supply.

(6) In the RT–67/GRC models listed in the chart below, capacitor C306 is added between ground and the wire joining J306 to J308. C306 aids in impedance matching between the transmitter output circuit and the antenna. The capacitor was

removed from some models bearing Order No. 32111–51 to prevent regeneration in receiver r-f amplifier V1.

Order No.	Serial No.
16831–Phila–51	3995 and up.
18651–Phila–49	Late models.
32111–Phila–51	Some models.

28. Ringer Circuit
(fig. 20)

a. The ringer circuit includes an oscillator, designed to generate a 1,600-cycle signal, and a DIAL LIGHT OFF-ON-RING switch, S302. The switch, when turned to the RING position, turns on the transmitter, breaks the microphone circuit, energizes the oscillator, and applies the oscillator output to the input of the transmitter modulator circuit, for transmission like any other audio signal.

b. The ringer oscillator (fig. 20) uses one section (V104B) of the twin-triode type 3A5 tube in a combination resistance stabilized Hartley oscillator and tickler coil oscillator circuit. The other triode section of V104 is used as the transmitter oscillator (par. 20).

(1) The 1,600 cycle frequency generated by the oscillator is determined by the tuned circuit, which consists of the plate and grid windings (terminals 3–4 and 1–2, respectively) of transformer T105 and fixed tuning capacitor C143 in parallel with C206. These capacitors join the plate (pin 2) to the grid circuit, and thus are shunted effectively across the tuning coils. Since terminal 4 of T105 is connected to ground for ac through the filter capacitors in the 85-volt supply, it is effectively connected to terminal 1 which is also grounded. This junction completes the tuned circuit and also provides the necessary connection to the filament (pin 7) through ground, to complete the Hartley oscillator circuit.

(2) Regenerative feedback from the plate to the grid (pin 3) is established partly by induction from winding 3–4 to winding 1–2 of T105, and partly by the voltage developed across grid winding 1–2 by oscillatory current in the tuned circuit. The regenerative feedback circuit is completed through isolation resistor R126, which limits the amount of feedback voltage actually applied to the grid, and thus prevents the oscillator from being overloaded.

(3) Degenerative feedback, established from the plate to the junction of resistor R127 and internal potentiometer R128 in the grid d-c return circuit by capacitor C140, serves to stabilize the oscillator against changes in power supply potentials and variations in tube characteristics. The amount of degenerative feedback voltage actually applied to the grid, as well as the phase angle of the voltage thus fed back, is determined by the setting of potentiometer R128. In this connection, R128 may be considered as having the dual functions of providing an adjustable tap connection for the grid circuit across which the feedback voltage is developed, and of forming an adjustable resistive element of an R–C-type phase-shifting network which determines the amount of phase shift or frequency compensation provided in the feedback voltage. Potentiometer R128 thus serves as a fine-frequency adjustment for the oscillator under particular operating conditions. The adjustment is made in the factory, and the shaft of the control is sealed with a locking nut. During normal operation, no further adjustment of the potentiometer is necessary.

(4) The oscillator output is developed across winding 1–5 of T105 and is applied over terminals 8 of connectors J108, P308, and contacts 1E (section 1, front) of switch S302, and terminals 7 of P308 and J108, to input winding 4–5 of modulator input transformer T106. From this point, the path of the ringing signal is the same as that of any microphone signal, as described in the preceding paragraphs.

c. Plate voltage for the ringer oscillator is routed from the 85-volt supply connected to terminal B of J309, over terminals 7 of P306 and J106, over contacts 9–8 (normally opened) of relay O 101, over terminals 4 of J106 and P306, contacts 1C (section 1 rear) of S302 (RING posi-

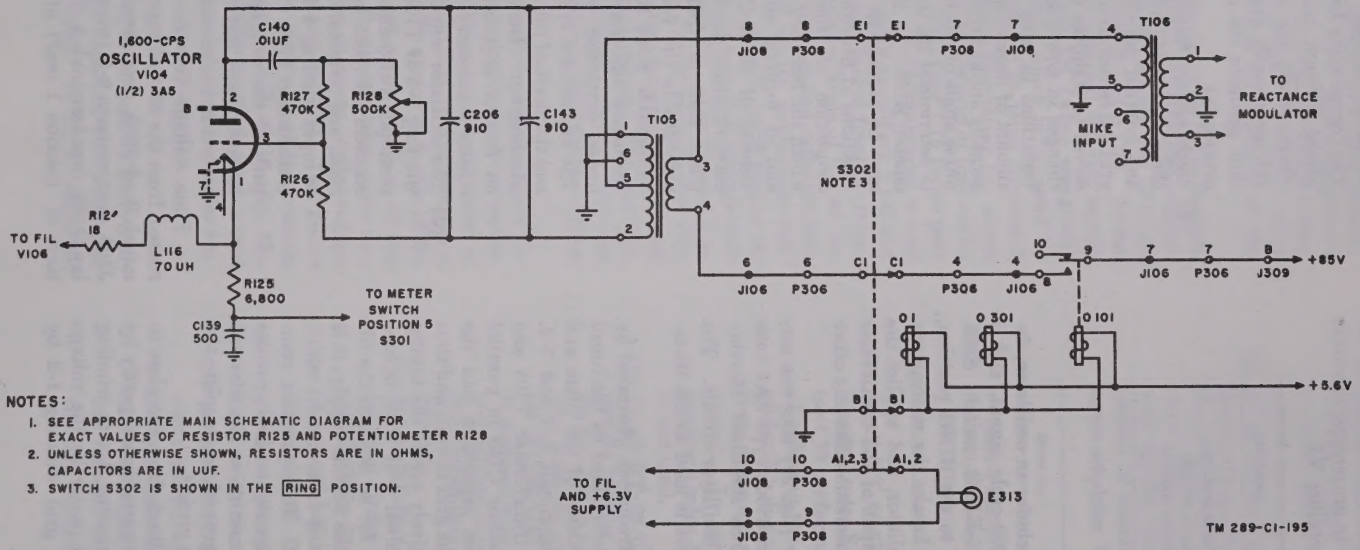

Figure 20. Ringer circuit, functional diagram for all models except RT–66/GRC models bearing Order No. 18651-Phila-49.

tion), terminals 6 of P306 and J106, and winding 4–3 of T105 to the plate (pin 2) of tube V104.

d. When switch S302 is in the RING position, the contacts prepare the transmitter circuit for transmission of the ringing signal as follows:

(1) Contacts 1E (section 1 front) connect the oscillator to the modulator input circuit (*a* above).

(2) Contacts 1B (section 1 rear) apply ground return to the control relays O1, O101, and O301, and cause these relays to become energized. This causes the transmitter to be turned on and the receiver to be turned off (par. 41).

(3) Contacts 1C (section 1 rear) connect the plate circuit to the 85-volt supply (*c* above).

(4) Contacts 1F (section 1 rear) open the microphone circuit connection to modulator input transformer T106. (See the main schematic for each receiver-transmitter.)

(5) Contacts 1A (section 1 rear) energize dial light E313 by connecting it into the filament circuits.

e. Circuit differences (fig. 21) are as follows: In RT–66/GRC models bearing Order No. 18651–Phila–49, the ringer oscillator is changed and operates as follows: The ringer oscillator uses one section (V104B) of the twin-triode type 3A5 tube in a conventional tickler coil oscillator circuit. The other triode section of that tube is used as the transmitter oscillator (par. 20). The 1,600-cycle frequency generated by the oscillator is determined by the parallel resonant plate circuit, consisting of winding 3–4 of transformer T105 and fixed capacitors C143 and C206. C143 and C206 have opposite temperature coefficients and are connected in parallel to minimize changes in capacitance caused by variations in temperature. Regenerative feedback from the plate (pin 2) to the grid (pin 3) is established by induction from winding 3–4 to winding 1–2 of T105. The network consisting of capacitor C140 and resistor R127, in the grid circuit, functions to prevent the oscillator from being overloaded. Degenerative feedback, established from the plate circuit to the grid circuit through bypass capacitor C141 and resistor R128, serves to stabilize the oscillator against changes in power supply potentials and variations in tube characteristics. The oscillator output is developed across secondary winding 5–6 of T105, and is applied over terminals 8 of connectors J108 and P308, contacts 1E (section 1

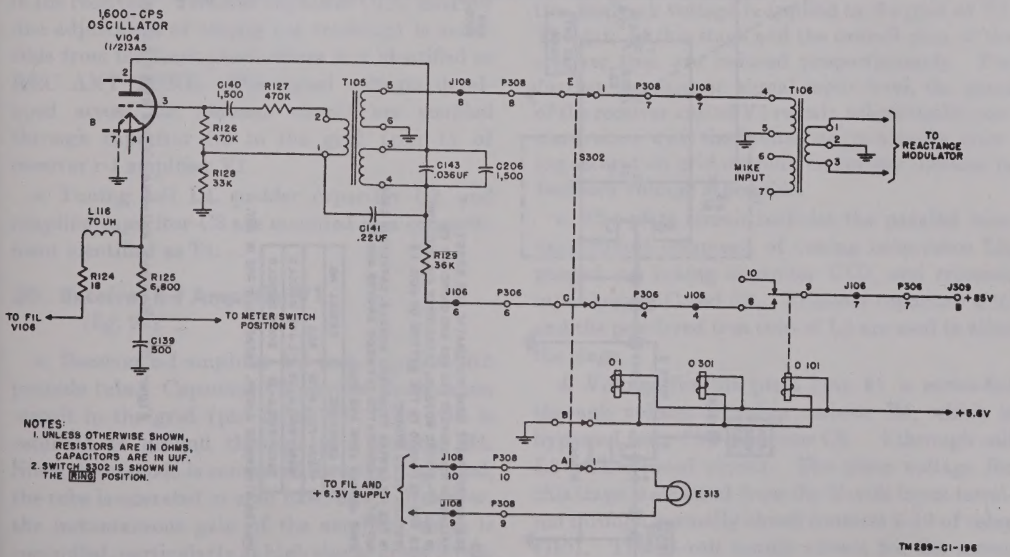

Figure 21. Ringer circuit, functional diagram for RT–66/GRC models bearing Order No. 18651-Phila-49.

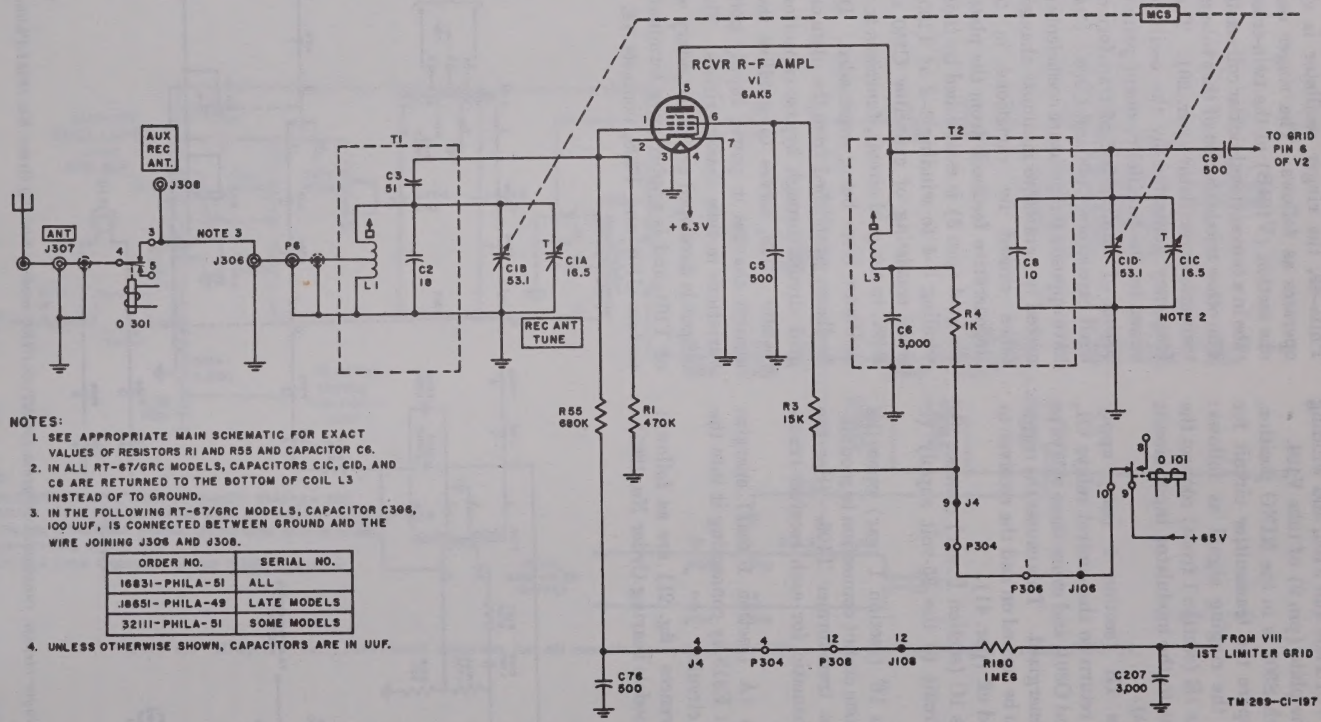

NOTES:

1. SEE APPROPRIATE MAIN SCHEMATIC FOR EXACT VALUES OF RESISTORS R1 AND R55 AND CAPACITOR C6.
2. IN ALL RT-67/GRC MODELS, CAPACITORS C1C, C1D, AND C8 ARE RETURNED TO THE BOTTOM OF COIL L3 INSTEAD OF TO GROUND.
3. IN THE FOLLOWING RT-67/GRC MODELS, CAPACITOR C306, 100 UUF, IS CONNECTED BETWEEN GROUND AND THE WIRE JOINING J306 AND J308.

ORDER NO.	SERIAL NO.
16831-PHILA-51	ALL
18651-PHILA-49	LATE MODELS
32111-PHILA-51	SOME MODELS

4. UNLESS OTHERWISE SHOWN, CAPACITORS ARE IN UUF.

Figure 22. Receiver antenna circuit and r-f amplifier, functional diagram for RT-67/GRC and RT-68/GRC models.

front) of switch S302, and terminals 7 of P308 and J108 to input winding 4–5 of modulator input transformer T106. From this point, the path of the ringing signal is the same as that of any microphone signal, as described in the preceding paragraphs. Subparagraphs *c* and *d* above also apply to this circuit except that resistor R129, in series with the plate supply circuit (fig. 21), is used to decrease the plate voltage applied to the oscillator.

29. Receiver Antenna Circuit
(fig. 22)

a. The antenna, which is common to both the receiver and the transmitter, is plugged into panel-mounted coaxial ANT connector J307. The antenna lead is connected to a tap on tuning inductance L1 through the normally closed contacts of relay O301, panel-chassis connectors J306 and P6, and a short length of coaxial cable. Coil L1 is tuned by ganged r-f tuning capacitor C1B, REC ANT TUNE trimmer capacitor C1A, and fixed trimmer capacitor C2.

b. The antenna tuning range is the same as that of the overall receiver-transmitter. Tuning is controlled by both the MCS and TENTH MCS controls on the front panel. For alinement purposes, the inductance of L1 is adjusted by means of the powdered iron core to match the antenna to the receiver. Trimmer capacitor C1A, used for fine adjustment of tuning (or tracking) is accessible from the front panel where it is identified as REC ANT TUNE. The signal voltages developed across the antenna circuit are coupled through capacitor C3 to the grid (pin 1) of receiver r-f amplifier V1.

c. Tuning coil L1, padder capacitor C2, and coupling capacitor C3 are mounted in a compartment identified as T1.

30. Receiver R-f Amplifier V1
(fig. 22)

a. Receiver r-f amplifier V1 uses a type 6AK5 pentode tube. Capacitor C3 couples the antenna circuit to the grid (pin 1) of V1. The grid is returned to ground through grid resistor R1. Since the cathode is connected directly to ground, the tube is operated at zero fixed bias. However, the instantaneous gain of the amplifier stage is controlled, particularly at high signal input levels, by a voltage feedback circuit from the grid (pin 6) of receiver first limiter stage V111 to the grid of V1. The feedback circuit is established through the V111 grid resistor, R180, pins 12 of J108 and P308, pins 4 of connectors P304 and J4, and through voltage-dropping and isolating resistor R55. In this connection, V1 grid resistor R1 serves as part of a voltage divider for the feedback voltage, thus, only a portion of the voltage developed in the grid circuit of V111 is fed back across R1 as an agc voltage for the grid of V1.

b. During standby periods, the voltage appearing at the grid of V111 is caused by noise generated within the receiver and noise fed to the receiver from the antenna. This noise voltage is rectified in the grid circuit of V111 and is fed back as a d-c voltage across R1, for application to the grid of V1. Capacitors C207 and C76, shunted across the feedback path, serve to filter out a-c voltage components. The voltage developed across R1 is substantially a d-c voltage negative at the grid of V1. This voltage is very small, however, and has little effect on the gain of V1 and therefore, on the overall gain of the receiver. When a low-level signal enters the receiver, there is a slight increase in the amount of feedback voltage, but the situation remains substantially as described above the no-signal condition. When a sufficiently strong signal enters the receiver to cause the limiter grid to draw saturation current, a relatively large negative feedback voltage is applied to the grid of V1. The gain of this stage and the overall gain of the receiver thus are reduced proportionately. For further increases in signal input level, the gains of the receiver and of V1 remain substantially constant, since with the limiter stages already drawing saturation grid current, no further increase in feedback voltage is possible.

c. The plate circuit includes the parallel resonant circuit composed of tuning inductance L3, ganged r-f tuning capacitor C1D, and trimmer capacitors C1C and C8. Trimmer capacitor C1C and the powdered iron core of L3 are used to aline the stage.

d. Voltage for the plate (pin 5) is series-fed through voltage-dropping resistor R4, which is bypassed for r-f by capacitor C6. I through coil L3 of the tuned circuit. The plate voltage for this stage is obtained from the 85-volt input terminal through normally closed contacts 9–10 of relay O101. The 85-volt supply circuit for the screen (pin 6) includes normally closed contacts 9–10 of

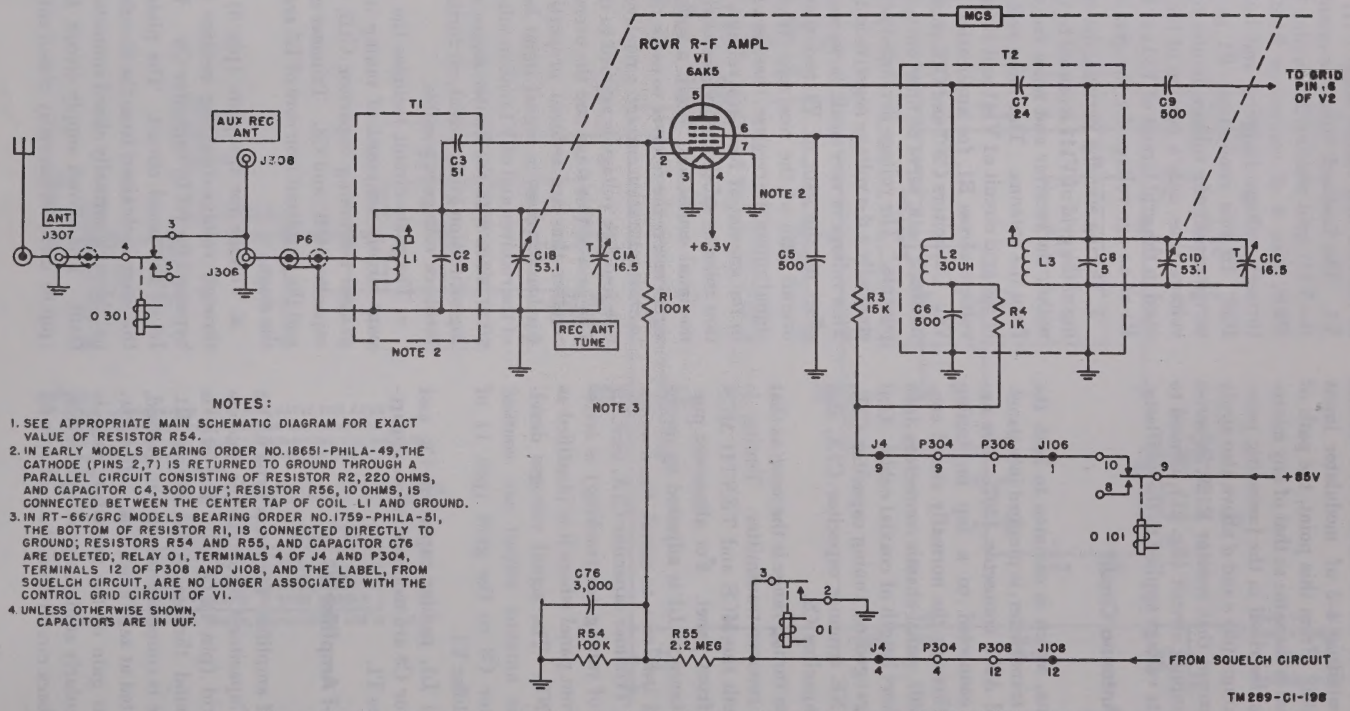

NOTES:

1. SEE APPROPRIATE MAIN SCHEMATIC DIAGRAM FOR EXACT VALUE OF RESISTOR R54.
2. IN EARLY MODELS BEARING ORDER NO. 18651-PHILA-49, THE CATHODE (PINS 2,7) IS RETURNED TO GROUND THROUGH A PARALLEL CIRCUIT CONSISTING OF RESISTOR R2, 220 OHMS, AND CAPACITOR C4, 3000 UUF; RESISTOR R56, 10 OHMS, IS CONNECTED BETWEEN THE CENTER TAP OF COIL L1 AND GROUND.
3. IN RT-66/GRC MODELS BEARING ORDER NO. 1759-PHILA-51, THE BOTTOM OF RESISTOR R1, IS CONNECTED DIRECTLY TO GROUND; RESISTORS R54 AND R55, AND CAPACITOR C76 ARE DELETED; RELAY O1, TERMINALS 4 OF J4 AND P304, TERMINALS 12 OF P308 AND J108, AND THE LABEL, FROM SQUELCH CIRCUIT, ARE NO LONGER ASSOCIATED WITH THE CONTROL GRID CIRCUIT OF V1.
4. UNLESS OTHERWISE SHOWN, CAPACITORS ARE IN UUF.

Figure 23. Receiver antenna circuit and r-f amplifier, functional diagram for RT-66/GRC models.

relay O101, and screen voltage dropping resistor R3, which is bypassed by capacitor C5. Filament voltage is obtained directly from the external 6-volt supply.

e. The output of V1 is coupled through capacitor C9 to the grid circuit of receiver first mixer V2. Plate circuit components L3, C6, C8, and R4 are assembled in a can identified as T2. The tuning slug for L3 is accessible through the cover of the can.

f. Circuit differences (figs. 22 and 23) are as follows:

(1) In all RT–66/GRC models (fig. 23), the grid circuit is returned to ground for rf through capacitor C76, and for dc through resistors R1 and R54 (*a* above). The bias applied to the receiver r-f amplifier is developed in the squelch circuit (V-103), and affects the amplifier as follows: During standby with the squelch circuit operative, a bias voltage developed by the diode portion of V103 is applied across the voltage divider circuit, R55 and R54. The voltage developed across R54 reduces the gain of V1. When a signal enters the receiver antenna circuit, a bias is developed at the limiter grid (V111). This bias disables the squelch circuit (par. 40). The output of the squelch diode is cut off and the bias voltage across R54 is removed, thus, V1 is restored to normal operation. During transmit periods when relay O1 is operated contacts 2 and 3 close, short out the squelch diode load resistor, shunt R55 across R54, and effectively disconnect the grid circuit of V1 from the squelch circuit. The purpose of this arrangement is as follows: Note that during transmit periods, plate and screen voltages for V1 are removed by the opening of contacts 9 and 10 of relay O101. However, with filament voltage still present, a voltage might develop across R54 during transmit periods by rectification of transmitter r-f voltage at the grid of V1. This voltage, applied through the squelch bias circuits to the audio tubes, would tend to drive these tubes toward cutoff. During transmit periods, the audio tubes must be operative to permit sidetone to pass through to the headphones. The arrangement of the relay contacts described above insures that the audio tubes will remain operative. For details of squelch circuit operation, refer to paragraph 40. Since the value of R55 is very large, its shunting effect on the R54 portion of the d-c grid path is negligible.

(2) In RT–66/GRC models bearing Order No. 1759–Phila–51, grid resistor R1 is returned directly to ground. Capacitor C76, resistors R54 and R55, and the connection to the squelch circuit are not used. Since the cathode, pin 7, also is connected directly to ground, V1 is operated at a slightly negative bias produced by contact potential. The stage is disassociated completely from the squelch circuit and is fully operative as long as relay O101 is de-energized (during standby and reception periods).

(3) In all RT–66/GRC models (fig. 23), voltage for the plate (pin 5) is shunt-fed through voltage-dropping resistor R4, which is bypassed for rf by capacitor C6, and through coil L2. Capacitor C7 functions to block d-c voltage from the tuned plate circuit. Plate circuit components L2, L3, C6 through C8, and R4 are assembled in a can identified as T2.

(4) In early RT–66/GRC models bearing Order No. 18651–Phila–49 (fig. 23), the cathode, pins 2–7, is returned to ground through a parallel circuit consisting of resistor R2 and capacitor C4. R2 and C4 function as a cathode-bias resistor and a cathode bypass capacitor, respectively. Resistor R56 is connected between the center tap of coil L1 and ground.

(5) In all RT–67/GRC models (fig. 22), capacitors C1C, C1D, and C8 are returned to the bottom of coil L3 instead of to ground.

(6) In the RT–67/GRC models (fig. 22) listed in the chart below, capacitor C306, 100 $\mu\mu$f, is added between ground and the wire joining J306 to J308. C306 aids in impedance matching between the transmitter output circuit and the antenna. The capacitor was removed from some

models bearing Order No. 32111–Phila–51 to prevent regeneration in receiver r-f amplifier V1.

Order No.	Serial No.
16831–Phila–51	All.
18651–Phila–49	Late models.
32111–Phila–51	Some models.

31. Receiver First Mixer V2

(fig. 24)

a. The first mixer stage uses a type 1R5 pentagrid converter tube, V2. Signal voltage injection takes place at the third grid (pin 6) of the tube through coupling capacitor C9. This grid is returned to ground through grid-leak resistors R5 and R6. Resistor R6, in series with R5, provides means for measuring the applied signal voltage. Measurement is made between test point E2K and ground.

b. The output of first harmonic amplifier V4 (par. 23) is applied through coupling capacitor C20 to the first grid (pin 4) of V2. The first grid is returned to ground through grid resistors R7 and R8. Resistor R8, in series with R7, provides means for measuring the applied harmonic amplifier voltage. Measurement is made between test point E2L and ground.

c. The incoming signal frequencies and the harmonic amplifier frequency beat against each other in V2 to produce difference frequencies. Since the harmonic amplifier frequency is below the signal frequency by an amount between 4.45 and 5.45 mc (depending on the settings of the MCS and TENTH MCS controls on the front panel), the difference frequency produced in V2 is between 4.45 and 5.45 mc. This is the first i-f range of the receiver and is selected by the tuned plate circuit of V2 (*d* below). The mixer also produces numerous frequencies in addition to the difference frequencies. All but the wanted difference frequencies are effectively rejected by the high Q of the tuned circuit.

d. The tuned-plate-circuit components of V2 are located on the i-f chassis. The plate (pin 2) of V2 is connected through a coaxial cable and interchassis connectors P1 and J101 to the parallel resonant circuit composed of tuning coil L117 and

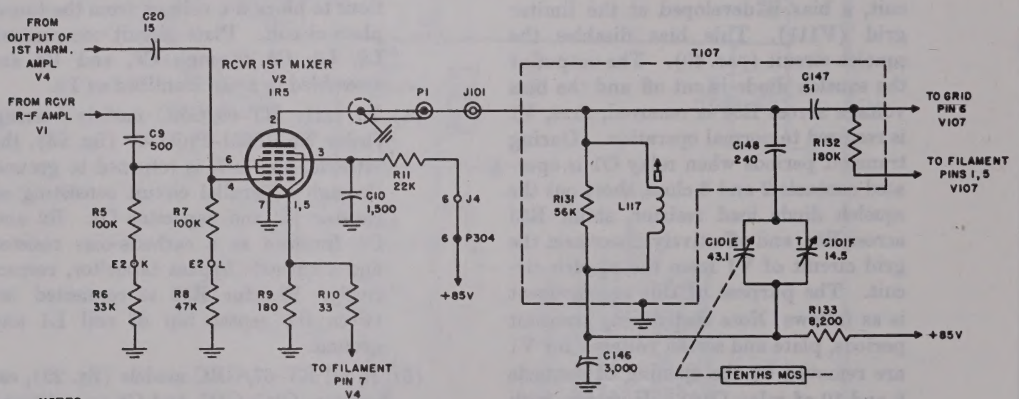

NOTES:

1. SEE APPROPRIATE MAIN SCHEMATIC DIAGRAM FOR EXACT VALUES OF RESISTORS R5 AND R6, AND CAPACITORS C10 AND C20.
2. IN ALL RT-66/GRC MODELS EXCEPT THOSE BEARING ORDER NO. 1759-PHILA-51, AND IN THE FOLLOWING RT-67/GRC MODELS, +85 VOLTS IS APPLIED TO THE SCREEN GRID CIRCUIT THROUGH NORMALLY CLOSED CONTACTS 9-10 OF RELAY O101, TERMINALS 1 OF J106 AND P306, AND TERMINALS 9 OF P304 AND J4, INSTEAD OF THROUGH TERMINALS 6 OF P304 AND J4.

ORDER NO.	SERIAL NO.
16831-PHILA-51	ALL
18651-PHILA-49	ALL
32111-PHILA-51	1-13,671

3. UNLESS OTHERWISE SHOWN, RESISTORS ARE IN OHMS, CAPACITORS ARE IN UUF.

TM 289-CI-199

Figure 24. Receiver first mixer, functional diagram.

capacitors C101E and C101F. The circuit is tuned to resonance at a frequency between 4.45 and 5.45 mc. The particular frequency to which it is tuned depends on the setting of the TENTH MCS control on the front panel. Fixed padder capacitor C148 serves to adjust the capacitance of the tuned circuit to permit tracking with receiver oscillator V101 (par. 33). For alinement purpose, adjustment is made by means of trimmer capacitor C101F. The inductance of the tuned circuit is adjustable by means of the powdered iron core of L117. Damping resistor R131 serves to broaden the response of the tuned circuit.

e. Plate voltage is supplied through voltage-dropping resistor R133, which is bypassed to ground by capacitor C146. Screen voltage is applied through resistor R11 which is bypassed by capacitor C10. The plate and screen voltages are obtained directly from the 85-volt source. The filament circuit includes voltage-dropping resistor R10 and current shunting resistor R9. The output of the mixer stage is coupled through capacitor C147 to the grid of first variable i-f amplifier V107.

f. Coil L117, capacitors C147 and C148, resistor R131, and the grid-leak resistor (R132) of first variable i-f amplifier V107, are included in a can identified as T107.

g. Circuit differences are as follows: In all RT-66/GRC models, except those bearing Order No. 1759-Phila-51, and in the following RT-67/GRC models, +85 volts is applied to the screen grid circuit through normally closed contacts 9–10 of relay O101, terminals 1 of J106 and P306, and terminals 9 of P304 and J4, instead of through terminals 6 of P304 and J4. Screen voltage therefore is applied only during receiver and standby conditions of the set.

Order No.	Serial No.
16831-Phila-51	All.
18651-Phila-49	All.
32111-Phila-51	1–13671.

32. Variable i-f Amplifiers V107 and V108 (fig. 25)

a. The output of the receiver first mixer stage is amplified in a two-stage variable tuned i-f amplifiers, V107 and V108. Each stage uses a type 1U4 pentode tube. The plate circuit of each stage is tuned to resonance at the i. f. between 4.45 and 5.45 mc by sections of variable i-f ganged capacitor C101. Other sections of this capacitor tune receiver first mixer V2, receiver oscillator V101, and transmitter oscillator V104A. Tuning is accomplished by means of the TENTH MCS control on the front panel. The variable i-f amplifier is designed to pass an 85-kc band of frequencies centered about the i. f.

b. The grid (pin 6) of first variable i-f amplifier V107 is placed at approximately filament potential by grid-leak resistor R132. The filament is returned to ground for i. f. through bypass capacitor C149. The plate circuit is tuned to resonance at the first i. f., between 4.45 and 5.45 mc, by the parallel resonant circuit composed of variable inductance L118 and variable i-f tuning capacitors C101G and C101H. Trimmer capacitor C151 and padder capacitor C152 serve to adjust the total capacity of the tuned circuit to facilitate tracking. Tracking adjustment is made by means of trimmer capacitor C101H and the powdered iron core of L118. To broaden the response of the amplifier stage, damping resistor R134 is placed across the tuned circuit. Plate and screen potentials are applied through voltage-dropping resistor R136, which is bypassed by capacitor C150. For filament circuit details, refer to paragraph 42. The plate circuit components of V107 and the grid circuit components of second variable i-f amplifier V108 are assembled in a can labeled T108.

c. Second variable i-f amplifier V108 is very similar in circuit arrangement to the first stage, V107. The grid circuit includes coupling capacitor C153 which applies the output of V107 to the grid (pin 6) of V108. Resistor R135 returns the grid to the filament for dc. The filament is placed at ground potential for i-f through bypass capacitor C154. The plate circuit is double-tuned to resonance at the variable i. f. by ganged i-f tuning capacitors C101J and C101L. The primary tuned circuit includes tuning inductance L119, coil L121, tuning capacitor C101J, trimmer capacitor C101K, fixed trimmer capaçitor C156, and fixed padder capacitor C157. The function of coil L121 is to provide coupling between the primary and secondary windings. The secondary circuit includes tuning inductance L120, tuning capacitor C101L, trimmer capacitor C101M, fixed trimmer capacitor C160, and fixed padder capacitor C159. Plate

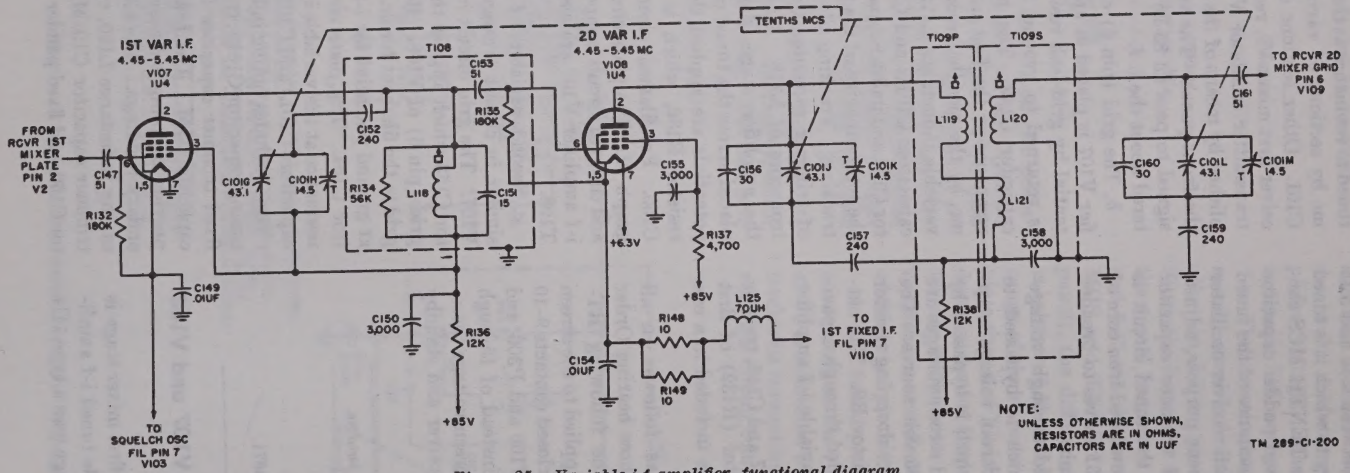

Figure 25. Variable i-f amplifier, functional diagram.

voltage is supplied through voltage-dropping resistor R138 which is bypassed by capacitor C158. Screen voltage is applied through voltage-dropping resistor R137 which is bypassed by capacitor C155. Double tuning with overcoupling by means of L121 is used to broaden the bandwidth of the i-f amplifier as required to pass an 85-kc band of frequencies centered about the nominal first i. f. selected by the tuning controls. L119 and R138 are inclosed in a can labeled T109P. L120, L121, and C158 are inclosed in a can labeled T109S. The output of the second variable i-f amplifier is coupled through capacitor C161 to the input of receiver second mixer stage V109.

33. Receiver Oscillator V101
(fig. 26)

a. The self-excited receiver oscillator uses type 1L4 pentode tube V101. The tube is used as a triode by connecting the plate (pin 2) to the screen grid (pin 3). The circuit is a modified Hartley type, similar to the one used for transmitter oscillator V104A (par. 20). The tuning range of the receiver oscillator is 3.05 to 4.05 mc.

b. Plate coil L101 and grid coil L102 form a conventional Hartley inductive voltage dividing circuit. These coils, in conjunction with tuning capacitor C101B, trimmer capacitor C101A, and fixed trimmer capacitor C102 make up the tank circuit which determines the nominal or center frequency generated by the oscillator. Fixed trimmer C102 serves to facilitate tracking of the oscillator with the tuned circuits of the receiver variable i-f amplifier and transmitter oscillator. Capacitor C104 completes the tank r-f circuit by connecting coils L101 and L102. It also functions as a d-c blocking capacitor and plate supply bypass. The junction between the two coils is connected to the filament (pins 1, 5). Capacitor C105 couples the grid (pin 6) through ground to the tank circuit. The other end of the tank circuit is connected directly to the plate (pin 2).

c. Regenerative feedback from the plate to the grid circuit is provided by induction from coil L101 to coil L102 and by the voltage developed across L102 by oscillatory current through the tank circuit. The amount of feedback is determined by the turns ratio between the two coils and by the impedance of the grid coil. The feedback voltage is coupled to the grid through capacitor C105. The nominal or center frequency of the oscillator is set during alinement by the adjustment of trimmer capacitor C101A and the powdered iron core associated with coils L101 and L102. The oscillator frequency is correct when the difference between the variable i-f and the oscillator frequency is 1.4 mc.

d. Plate voltage is applied to the plate (pin 2) from the 85-volt source through filter chokes L104 and L103 and plate coil L101. The plate supply is bypassed by capacitors C103 and C104. Resistor R102 is shunted across the filament to provide proper current through the filament. Chokes

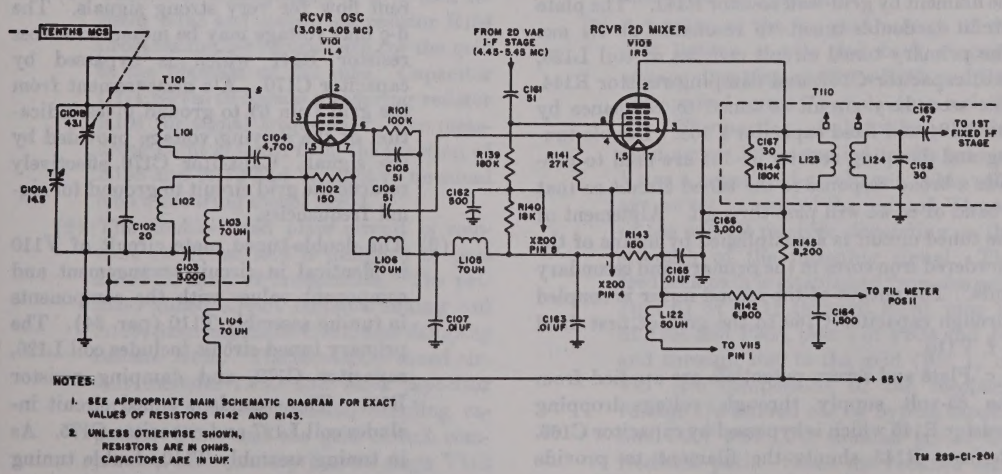

Figure 26. Receiver oscillator and second mixer, functional diagram.

L106 and L105 and filter capacitor C107 isolate the filament circuit for intermediate frequencies. Bias for the grid is developed across L102 and across the grid-leak bias network consisting of capacitor C105 and resistor R101. The amount of bias developed is determined by the d-c resistance of L102 and the values of R101 and C105. The oscillator output, developed across grid coil L102, is coupled through capacitor C106 to the grid (pin 4) of receiver second mixer V109.

e. The oscillator tank circuit components, L101, L102, and C102; filter choke L103; and bypass capacitor C103, are inclosed in tuning assembly T101.

34. Receiver Second Mixer

(fig. 26)

a. The receiver second mixer is very similar to the receiver first mixer. It uses a type 1R5 pentagrid converter tube, V109, to mix the output of the receiver oscillator with that of the second variable i-f amplifier stage to provide the recond i. f. of 1.4 mc.

b. The output of second variable i-f amplifier V108 is coupled through capacitor C161 to the signal grid (pin 6) of V109. The grid (pin 6) is returned to filament through grid-leak resistors R139 and R140. Resistor R140 is a measuring resistor and is bypassed by capacitor C162. The output of the receiver-oscillator is coupled through capacitor C106 to the oscillator injector grid (pin 4) of V109. The first grid (pin 4) is returned to the filament by grid-leak resistor R141. The plate circuit is double-tuned to resonance at 1.4 mc. The primary tuned circuit consists of coil L123, fixed capacitor C167, and damping resistor R144. The secondary circuit is tuned to resonance by coil L124 and fixed capacitor C168. Double-tuning and damping resistor R–144 are used to provide a broad response to the tuned circuit so that a band of 85 kc will pass through. Alinement of the tuned circuit is accomplished by means of the powdered iron cores in the primary and secondary coils. The output of the second mixer is coupled through capacitor C169 to the grid of first fixed i. f. V110.

c. Plate and screen potentials are applied from the 85-volt supply through voltage-dropping resistor R145 which is bypassed by capacitor C166. Resistor R143 shunts the filament to provide proper current through the filament. Filament voltage is supplied through isolating choke L122 which is bypassed by capacitor C165.

d. Provisions are made for measuring the signal voltage applied to the grid (pin 6) of the receiver mixer by bringing the junction of resistors R140 and R139 to pin 8 on test socket X200. The voltage drop across resistor R140 may be measured between pins 8 and 1 (ground) of X200. Resistor R142, which is bypassed by capacitor C164, connects the string of filaments in which V109 is contained to position 11 on METER switch S301. Another filament voltage measuring point is provided at pin 4 of X200 and is bypassed by capacitor C163.

35. Fixed I-F Amplifier and Limiter Circuits

(*fig. 27 located in back of manual*)

a. First Fixed I-F-Amplifier V110. The 1.4-mc i-f band is selected from the output of receiver second mixer V109 by the double-tuned circuit in tuning assembly T110 (par. 34), and coupled through capacitor C169 to the grid (pin 6) of first fixed i-f amplifier V110, a type 1L4 pentode.

(1) Coupling capacitor C169 has the additional function of blocking any d-c current, which may be flowing in the filament-grid circuit of V110, from tuned secondary coil L124 of T110. The d-c return path to the grid is established through grid-leak resistors R146 and R147. The grid-leak resistors have the additional function of limiting grid current flow for very strong signals. The d-c bias voltage may be measured across resistor R147 which is bypassed by capacitor C170. A-c measurement from the grid (pin 6) to ground gives indication of the driving voltage provided by the signal. Capacitor C170 effectively returns the grid circuit to ground for signal frequencies.

(2) The double-tuned plate circuit of V110 is identical in circuit arrangement and component values with the components in tuning assembly T110 (par. 34). The primary tuned circuit includes coil L126, capacitor C172, and damping resistor R151. The secondary tuned circuit includes coil L127 and capacitor C175. As in tuning assembly T110, double tuning provides a high degree of i-f selectivity

while maintaining the desired bandwidth. The bandwidth is determined by overcoupling between the primary and secondary coils. In addition, the resistive load provided by R151 flattens out the frequency response of the tuned circuit. The 85-kc band, centered about 1.4 mc and selected by the tuned circuit, is coupled to the input of first limiter stage V111 through capacitor C176.

(3) Plate and screen voltages are applied through voltage-dropping resistor R152 which is bypassed by filter capacitor C173. Capacitor C174 bypasses the filament to ground for radio frequencies. Measuring resistor R150 connects the filament circuit to position 10 of METER switch S301.

(4) The components of the tuned plate circuit, coupling capacitor C176, and the grid circuit components of V111 are included in tuning assembly T111.

b. First Limiter V111. The first limiter uses a type 1U4 pentode tube. The circuit arrangement and the values of the components in this stage are identical with those of first fixed i-f amplifier V110. However, the stage has the dual function of providing further amplification to the signal band centered about 1.4 mc and eliminating any amplitude variations which may have been superimposed on strong signals. Limiting action of the stage is described in *d* below.

(1) The series arrangement of grid-leak resistor R153 and measuring resistor R154 provides the d-c return path for the grid to the filament of the tube. Capacitor C177 serves to bypass measuring resistor R154 for signal frequencies. The measuring point is taken from the junction of R153 and R154 and brought to terminal 3 on measuring socket X200.

(2) The double-tuned plate circuit is resonant at 1.4 mc and is designed to pass an 85-kc band of frequencies. The primary tuned circuit includes tuning coil L129, fixed capacitor C181, and damping resistor R155. The secondary tuned circuit includes L130 and fixed capacitor C182. These components, coupling capacitor C183, and the grid circuit components of secondary limiter stage V112 are all mounted in tuning assembly T112.

(3) Plate and screen potentials are applied through voltage-dropping resistor R156 which is bypassed by capacitor C180. The filament is bypassed to ground by capacitors C179 and C178. The amplified and limited output of this stage is selected by tuning assembly T112 and is coupled by capacitor C183 to the grid of second limiter V112.

(4) A portion of the d-c voltages developed in the grid circuits of the first and second limiters by grid current rectification (*c* below) is applied as bias to squelch oscillator V103. The voltage developed in the grid circuit of the first limiter is applied across a voltage divider consisting of resistors R111 and R113. The voltage developed in the grid circuit of the second limiter is applied across a voltage divider consisting of resistors R184 and R113. Since R113 is common to both voltage dividers, a combined voltage is developed across it. The combined voltage is applied as grid bias to squelch oscillator V103. This bias serves to control the squelch oscillator's on or off condition, depending on the absence or presence of a received signal. The combined limiting and gain characteristics of the first and second limiters for the various noise and signal conditions are utilized to perform uniform squelch control action (par. 40).

(5) A portion of the d-c grid voltage of the first limiter is also fed back through voltage-dropping resistors R180 and R55 and applied across V1 grid return resistor R1. The portion of the voltage developed across R1 is applied to the grid of V1 as a negative d-c voltage. This voltage serves to control the gain of V1 and of the overall receiver, depending on the strength of the incoming signal. The feedback path is established from the grid (pin 6) of V111 through R180, pins 12 of J108 and P308, pins 4 of P304 and J4, and through R55 to the grid (pin 1) of V1. A-c components of the feedback voltage are filtered out by bypass capacitors C207 and C76, shunted across the feedback path. Since the rectified current flowing through the grid circuit of

V111 depends on the signal level appearing at the receiver input, as well as on the gain of the particular receiver up to this point, the negative feedback voltage tends to stabilize the overall gain of the receiver, particularly for high signal input levels and for signals bordering on the receiver noise level. The net effect on the receiver is that better squelch control over a greater range of signal input levels is obtained.

c. Second Limiter Stage V112.

(1) The second limiter stage uses a type 1L4 pentode tube, V112. This tube was selected to obtain sufficient signal voltage to operate the following discriminator circuit. The output of first limiter stage V111 is coupled through capacitor C183 to the grid of V112. The grid circuit return path includes grid-leak resistor R157 and measuring resistor R158 which is bypassed for signal frequencies by capacitor C184. For measurement of grid drive, the junction of R157 and R158 is brought to pin 5 of test socket X200. A portion of the voltage developed in the grid circuit due to grid current rectification is applied to squelch oscillator V103 as control bias (*b*(4) above).

(2) The plate circuit components of the second limiter stage are assembled in tuning assembly T113. The primary circuit includes coil L132 and fixed capacitor C187. The secondary tuned circuit includes two balanced coils L133 and L134, shunted by the series arrangement of capacitors C188 and C189. Both the primary and the secondary circuits are tuned to resonance at 1.4 mc and the coupling between them is such that an 85-kc band of frequencies centered about 1.4 mc is selected. The secondary circuit is a portion of the discriminator stage and is described in conjunction with that stage in paragraph 36.

(3) Plate and screen potentials for the second limiter stage are supplied through resistor R160 which is bypassed by capacitor C186. For arrangement of the filament circuit, refer to paragraph 42.

(4) The signal voltages developed across the primary tuned circuit are applied over two paths to the secondary tuned circuit of the discriminator. One path is through inductive coupling between primary coil L132 and secondary coils L133 and L134. The other path is a direct connection from the plate (pin 2) of V112 to the junction between capacitors C188 and C189 (par. 36).

d. Limiting Action. The first and second limiter stages have the dual functions of amplifying the 1.4-mc band of frequencies and eliminating or reducing any amplitude variations which may have been superimposed on the signal in its travel from the distant transmitter through the air and through the preceding stages of the receiver. Note that any noise present at the receiver input or in the earlier stages of the receiver is superimposed on the signal primarily as amplitude variations.

(1) Proper operation of the discriminator circuit requires that the signal applied to it be free of amplitude variations due to bursts of noise, static, and other causes, and that for wide variations in the strength of incoming signals, the average signal voltage applied to the discriminator input circuit remains fairly constant. The circuit parameters of the fixed i-f amplifier and limiter stages are arranged to make both of these functions possible.

(2) When the signal voltage appearing across the grid circuit of V110, V111, or V112 exceeds a certain value, an increase in grid current causes limiting action or cutoff of the signal peaks for one half-cycle of the signal voltage, while plate current saturation causes similar limiter action to the other half-cycle of the signal voltage. In this manner, limiting of amplitude variations is accomplished in both the grid and plate circuits. When the average signal level is higher than that necessary to produce the required 2 volts across the discriminator input, the grid current is increased to the point where grid current rectification occurs. The d-c grid current then flows through the associated grid-leak resistor and develops a voltage across it that is negative at the grid (pin 6) of the tube. This negative voltage tends to bias the tube toward cutoff, thereby reducing the gain of the stage accordingly.

(3) While inherently all three stages of the fixed i-f amplifier limiter circuit are capable of providing the action described in (2) above, the gain of the receiver is such that the signal voltage levels across the grid circuit of the first fixed i-f amplifier stage normally are not high enough to start limiting action there. Thus, limiting action normally is confined to the first and second limiter stages and their designation as such is derived from this fact.

(4) When the receiver is in standby condition and no signal is being received, the noise voltages in the antenna and the internal noises, inherent in the r-f stages of this or any high gain circuit, are amplified by the several receiver stages. The amplified noise at the grid of second limiter V112 is sufficient to cause limiting action because of grid current rectification. Grid current rectification causes a reduction in the gain of V112. Normally, under no-signal conditions, V112 operates at reduced gain.

(5) When a signal, having the strength equivalent to the threshold of sensitivity of the receiver, enters the antenna circuit, the voltage across the input to first limiter V111 is raised to the point where the noise voltages (which normally are superimposed on the incoming signal as amplitude modulation) are cut off by plate current saturation and by an increase in the grid current flow in the first limiter stage. This limiting action then is supplemented by the limiting action of the second limiter stage.

(6) When very strong signals are received, the signal voltage across the first limiter stage is increased to the point where grid current rectification and a consequent reduction in the gain of the stage takes place. The reduced output of this stage prevents the second limiter stage from biasing itself to cutoff.

(7) The following is a summary of the limiting action described in (1) through (6) above. The first and second limiter stages eliminate any amplitude variations in the incoming signal. Such amplitude variations represent noises and are undesirable. In addition, it is necessary for the proper functioning of the discriminator circuit that the signal applied to it be approximately uniform in level regardless of the strength of the incoming signal. The gain of the receiver is sufficient to raise the level of the random noise to a value necessary to overload tube V112, the second limiter stage. Grid current flowing through resistor R157 in the grid circuit of that tube biases the tube toward the cutoff region and reduces the gain of the stage. Thus, the receiver normally operates at reduced gain due to the limiting action which takes place in V112. When a signal is received, tube V111 tends to overload and limits its output in a similar fashion. The reduction in output of V111 is translated in terms of a reduced negative bias on the grid of V112. This tends to raise the gain of V112 proportionately and prevent the output of that tube from falling off excessively because of overloading on strong signals. For weak signals, the gain of V112 is increased. For strong signals, the gain of that stage is reduced. The net result is that the output voltage of V112 is kept fairly constant.

e. Circuit Differences.

(1) In the following models, control voltage for squelch oscillator V103 is obtained only from the grid, pin 6 of first limiter V111, through resistor R111. The circuit connecting the grid, pin 6 of second limiter V112, to the squelch oscillator through resistor R184 is not used.

Model	Order No.	Serial No.
RT–66/GRC	18651–Phila–49	Late models.
	32138–Phila–51	1–2715.
RT–67/GRC	16831–Phila–51	All.
	18651–Phila–49	All.
	32111–Phila–51	1–7249.
RT–68/GRC	16817–Phila–51	9,675 and down.
	16821–Phila–51	16,667 and down.
	18651–Phila–49	1–1882 and down.

(2) In the following RT–66/GRC models, control voltage for the squelch oscillator is obtained from the grid (pin 6) of the first fixed i. f. (V110) through resistor R182 (fig. 24) as well as from the grid (pin 6) of the first limiter (V111, *b*(4) above). The combined limiting and gain characteristic of the first fixed i. f. and first limiter, for the various noise and signal conditions, are utilized to perform uniform squelch control action (par. 40). Resistor R183 is added from the screen grid, pin 3, to ground. R183, in conjunction with plate supply resistor R152, forms a voltage divider which reduces the plate supply voltage for V110.

Order No.	Serial No.
1759–Phila–51	All.
21434–Phila–50	All.
32137–Phila–51	All.
32138–Phila–51	2716 and up.

(3) The connection between the grid, pin 6, of first limiter V111 and the grid, pin 6, of r-f amplifier V1 is not used in RT–66/GRC models (par. 30*f*(1)). The gain of the r-f amplifier is controlled by the squelch circuit.

(4) In early RT–66/GRC models bearing Order No. 18651–Phila–49, V110 is a 1U4 instead of a 1L4 tube.

(5) In early RT–66/GRC models bearing Order No. 18651–Phila–49, control voltage for the squelch oscillator is obtained only from the grid, pin 6 of second limiter V112. The connection of resistor R111 is shifted from the grid, pin 6 of V111, to the grid, pin 6 of V112. The circuit connecting the grid, pin 6 of V112, to the squelch oscillator through resistor R184 is not used.

36. Discriminator Circuit, V113 and V114 (figs. 28 and 29)

a. The function of the discriminator circuit is to change frequency variations in the i-f signals

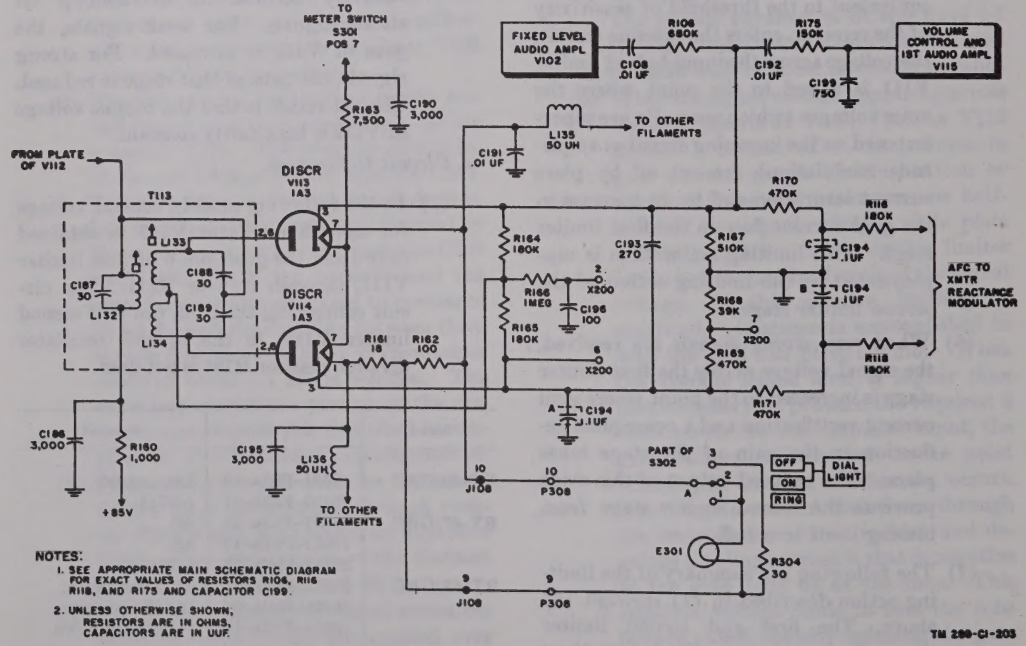

Figure 28. Discriminator circuit, functional diagram.

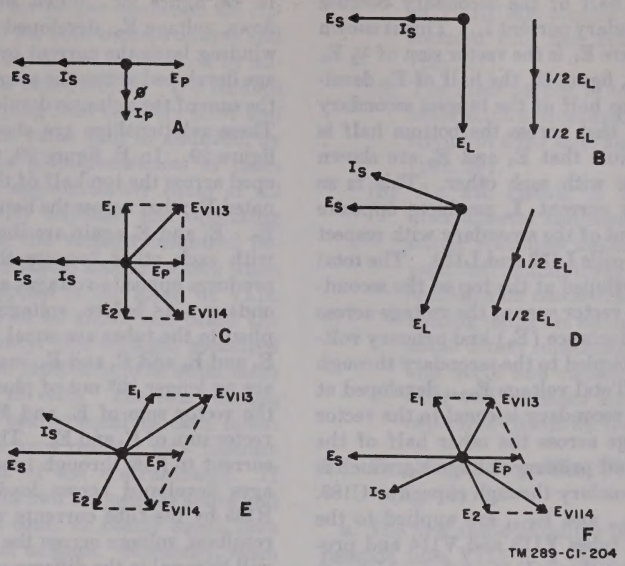

Figure 29. Discriminator operation, vector diagrams.

into audio variations. These variations in the i.f. from 1.4 mc represent the audio information contained in the i-f signal. The amount the frequency changes represents the amplitude of the audio; the rate at which the frequency changes represents the frequency of the audio. The audio signal then is amplified and used to energize a speaker, headset, or other device. The discriminator circuit consists of transformer T113, diode rectifier tubes V113 and V114, and associated circuit components.

b. The primary (L132) and secondary (L133 and L134 in series) of transformer T113 are both resonated to 1.4 mc; the primary by capacitor C187, and the secondary by capacitors C188 and C189 in series. Coupling between the primary and secondary is inductive through T113 and capacitive through capacitors C188 and C189. Signal voltage, E_p produced in the plate circuit of V112, is applied across the primary, and causes current I_p that is 90° out of phase with E_p to flow through the primary winding. I_p will produce a magnetic field ϕ, in phase with I_p, which will in turn induce voltage E_s in the secondary. Since maximum voltage is induced as the magnetic field passes through zero, E_s will be 90° out of phase with the magnetic field, and 180° out of phase with primary voltage E_p. Induced voltage E_s acts like a generator in series with the secondary and causes current I_s to flow through the secondary tuned circuit. The phase of the secondary current depends on the secondary impedance, which consists of the series impedance of the secondary winding and capacitors C188 and C189. When the i.f. is exactly 1.4 mc, the secondary will be resonant, and its impedance will be purely resistive. At this time secondary current I_s will be in phase with the induced voltage. In A, figure 29, primary voltage E_p, primary current I_p, magnetic field ϕ, induced voltage E_s, and secondary current I_s, are vectorially represented. Primary voltage E_p also represents the voltage which is coupled to the top and bottom of the secondary through capacitors C188 and C189. Because of the comparatively low reactance of C188 and C189 at the operating frequency, the phase and magnitude of the capacitively coupled voltage will be considered to be the same as E_p.

c. When secondary current I_s flows through the secondary winding, voltage E_L is developed across the secondary which leads I_s by 90° (B, fig. 29). Voltage E_L should not be confused with E_s which represents the induced secondary voltage. Induced secondary voltage E_s is considered as a generator acting in series with the secondary. Voltage E_L is equal to the sum of the voltages devel

oped across each half of the secondary because of the flow of secondary current I_s. This is shown in B, figure 29 where E_L is the vector sum of $\frac{1}{2}$ E_L plus $\frac{1}{2}$ E_L. In C, figure 29, the half of E_L developed across the top half of the tapped secondary is designated E_1; that across the bottom half is designated E_2. Note that E_1 and E_2 are shown 180° out of phase with each other. This is so because secondary current I_s produces opposite voltages at each end of the secondary with respect to the junction of coils L133 and L134. The total voltage, E_{V113}, developed at the top of the secondary is equal to the vector sum of the voltage across one-half of the inductance (E_1) and primary voltage E_p, which is coupled to the secondary through capacitor C188. Total voltage E_{V114} developed at the bottom of the secondary is equal to the vector sum of the voltage across the other half of the inductance (E_2) and primary voltage E_p, which is coupled to the secondary through capacitor C189.

d. Voltages E_{V113} and E_{V114} are applied to the plates of rectifier tubes V113 and V114 and produce current pulses through the tubes which are equal in magnitude but out of phase with each other. The current pulses flow through load resistors R164 and R165 of V113 and V114 respectively, and develop equal voltages across them. The voltage across each resistor appears as dc instead of pulses because of the filtering action of capacitor C193 placed across the load resistors. Since current flow through the load resistors is away from the junction of the resistors, the voltages developed across them are of opposite polarity. The output voltage is taken across load resistors R164 and R165 in series. Since the voltages across R164 and R165 are equal and opposite in polarity, the resultant output voltages will be zero. The resultant output voltage will remain at zero as long as the input to the discriminator remains at 1.4 mc. The connection between the junction of resistors R164 and R165 and the junction of coils L133 and L134 provides a return path for tube current.

e. When the input signal frequency differs from 1.4 mc, E_{V113} and E_{V114} no longer will be equal. Assume that the input frequency is above 1.4 mc. The impedance of the tuned secondary is no longer purely resistive, but contains some inductive reactance. The inductive reactance causes secondary current I_s to lag induced voltage E_s by an angle determined by the amount of frequency shift from 1.4 mc. This is vectorially represented in D, figure 29. When the secondary current flows, voltage E_L, developed across the secondary, winding leads the current by 90°. The total voltage developed across the secondary winding is still the sum of the voltages developed across each half. These relationships are shown vectorially in D, figure 29. In E, figure 29, the half of E_L developed across the top half of the secondary is designated E_1; that across the bottom half is designated E_2. E_1 and E_2 again are shown 180° out of phase with each other because the secondary current produces opposite voltages at each end of the secondary. As before, voltages E_{V113} and E_{V114} applied to the tubes are equal to the vector sums of E_1 and E_p and E_2 and E_p, respectively. E_1 and E_2 are no longer 90° out of phase with E_p, therefore, the vector sum of E_1 and E_p is greater than the vector sum of E_2 and E_p. This will cause a greater current to flow through tube V113, and the voltages developed across load resistors R164 and R165 by the tube currents will be unequal. The resultant voltage across the discriminator output will be equal to the difference between the voltages across R164 and R165 and will have the same polarity as the voltage across R164. As the frequency increases still further from 1.4 mc, the magnitude of the resultant output voltage will increase.

f. When the input frequency becomes less than 1.4 mc, the secondary circuit will contain capacitive reactance instead of inductive reactance, and secondary current I_s will lead induced voltage E_s instead of lagging it. The magnitude of voltage age E_{V113} instead of smaller, and the resultant voltage E_{113} instead of smaller, and the resultant voltage across load resistors R164 and R165 will be opposite in polarity. The vector relationships for the above conditions are shown in F. figure 29. Since the frequency of the input signal varies alternately on each side of 1.4 mc (*a* above), an a-c voltage or audio signal is developed across the series combination of load resistors R164 and R165 and across the discriminator output circuit. Capacitor C194A is the a-c ground for the output circuit. Resistors R167, R168, and R169 are load circuit balancing resistors. The voltage drop across R168 provides a means for measuring the output of the discriminator. Resistor R166, connected to the junction between R164 and R165, is an isolating resistor which permits additional discriminator measurements to be made.

g. An important point to be noted about the

discriminator is that for proper operation the circuit must be balanced for both signal voltages and d-c current. Signal balance is maintained by adjusting the coils in the tuned circuit. D-c balance is maintained by keeping load resistors R164 and R165 exactly equal in value and, in addition, by making sure that the plate resistances of tubes V113 and V114 are approximately equal at all times. For a properly adjusted and operating discriminator circuit, the voltage, measured between pins 1 and 7 of X200, should be zero when a 1.4-mc signal is applied to the input of V112. For signals that are 30 kc above and below the 1.4-mc center frequency, the voltages measured between pins 1 and 7 of X200 should be a minimum of +15 volts and −15 volts. The two voltages measured should be nearly equal to each other. Failure to obtain the zero reading may indicate improper adjustment of the discriminator. If the two voltages for the two frequencies above and below 1.4 mc are not equal or nearly equal, then the discriminator is off balance. Normally, when a fixed component (for example, capacitors C188 and C189 or resistors R164 and R165) of the discriminator is defective, the discriminator will be unbalanced. Unbalance in the discriminator that is not caused by a defective component may be restored by adjustment of the powdered iron cores of L133 and L134. If the bandwidth is incorrect, that is, if the ±15-volt reading is not obtained, then adjust coil L132, by means of the powdered iron core. It is assumed that the preceding tuned stages are alined properly and the oscillators are operating at the proper frequency.

h. The junction between resistors R168 and R169 is connected to pin 7 of test socket X200. Measurement from this point to ground (terminal 1 of X200) provides means for reading the output of the discriminator and for determining whether or not the tuned circuit is alined properly. Measurement between terminals 6 and 2 of test socket X200 provides a means for alining the primary circuit of discriminator transformer T113. Terminal 2 is connected through isolating resistor R166 to the junction of load resistors R164 and R165. Terminal 6 is connected directly to the junction of resistor R165 and the cathode of rectifier tube V114.

i. The output of the discriminator is applied over several paths as follows:

(1) The output of the discriminator is coupled through capacitor C192 and resistor R175 to VOLUME control R303, which is associated with first audio amplifier V115 (par. 37).

(2) The same output is coupled through resistor R106 and capacitor C108 to the grid circuit of fixed level audio amplifier V102 (par. 39).

(3) An afc circuit is derived from the discriminator and connected to the transmitter reactance modulator for the purpose of maintaining the transmitter oscillator on center frequency. The connecting paths are established through the audio filters consisting of resistors R170 and R116 and capacitor C194C on one side, and resistors R171 and R118 and capacitor C194B on the other side.

37. First Audio Amplifier V115

(fig. 30)

a. The first audio-amplifier stage uses type 3Q4 pentode tube V115 in a class A audio-amplifier circuit with transformer output. The output of the discriminator is brought to the grid (pin 3) of V115 through coupling capacitor C192, low-pass filter R175 and C199, VOLUME control R303, and de-emphasis capacitor C198. The low-pass filter, R175 and C199, serves to block h-f noises from the input of the amplifier. De-emphasis capacitor C198 serves to compensate the signal for the pre-emphasis imparted to it by the transmitter. The VOLUME control, located on the front panel, is connected into the circuit through pins 8 of chassis connectors P307 and J107.

b. The grid circuit includes the series arrangement of resistors R173, R174, R109, and R110. Resistor R110 serves as the load resistor for squelch diode V103 (par. 40). Resistor R173 is in series or in shunt with the grid circuit, depending on whether the receiver-transmitter is in receive and standby conditions or in the transmit condition. Contacts 1 and 3 of relay O101 are connected across this resistor. The armature (contact 2) of the relay is connected to the grid (pin 3) of V115. When the relay is de-energized, contact pair 1 and 2 is closed and resistor R173 is arranged in series with R174, R109, and R110 in the grid circuit. The input level to the amplifier then is the normal received level. When relay O101 is energized for transmission purposes, contacts 2 and 3 establish connection of the grid to the junction of R173 and R174; R173 is then in

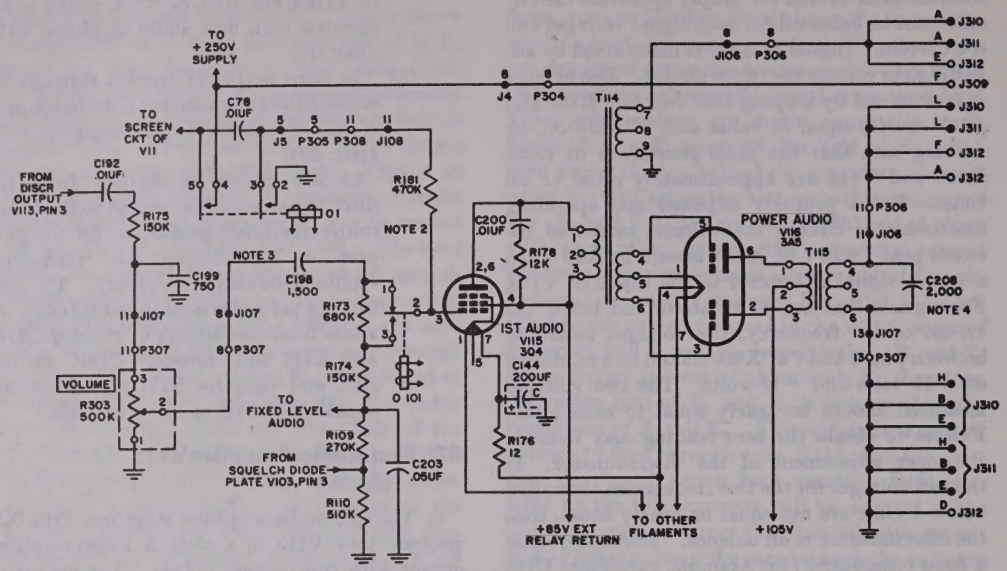

NOTES:

1. SEE THE APPROPRIATE MAIN SCHEMATIC DIAGRAM FOR EXACT VALUES OF RESISTOR R175 AND CAPACITOR C199.
2. IN THE FOLLOWING RT-67/GRC MODELS, THE CIRCUIT CONTAINING CAPACITOR C78, THE CONTACTS OF RELAY O1, TERMINALS 5 OF J5 AND P305, TERMINALS 11 OF P308 AND J108, AND RESISTOR R181, IS CONNECTED TO THE JUNCTION OF RESISTORS R109 AND R174, INSTEAD OF TO THE GRID, PIN 3 OF V115. R181 IS REPLACED WITH A WIRE STRAP.

ORDER NO.	SERIAL NO.
16831-PHILA-51	ALL
18651-PHILA-49	ALL
32111-PHILA-51	1-13,671

3. IN THE FOLLOWING MODELS, CAPACITOR C197, 270 UUF, IS CONNECTED BETWEEN GROUND AND THE JUNCTION OF TERMINAL 8 OF J107 AND CAPACITOR C198.

MODEL	ORDER NO.	SERIAL NO.
RT-67/GRC	16831-PHILA-51	ALL
	18651-PHILA-49	ALL
	32111-PHILA-51	7,250 AND UP
RT-68/GRC	16817-PHILA-51	9,674 AND DOWN
	16821-PHILA-51	16,666 AND DOWN
	18651-PHILA-49	ALL

4. CAPACITOR C208 IS CONTAINED ONLY IN RT-68/GRC MODELS BEARING ORDER NO. 32114-PHILA-51, SERIAL NUMBERS 38,051 AND UP.
5. UNLESS OTHERWISE SHOWN, RESISTORS ARE IN OHMS, CAPACITORS ARE IN UUF.

TM 289-CI-205

Figure 30. First audio amplifier and power audio amplifier, functional diagram for RT-67/GRC and RT-68/GRC models.

series with the input circuit to the grid, and thus acts as a voltage-dropping resistor. The signal applied to the first audio amplifier during transmission is the sidetone signal. The purpose of placing R173 in series with the signal is to drop the sidetone level sufficiently to prevent acoustic feedback when monitoring in the handset receiver or loudspeaker.

c. The bias applied to the amplifier is a combination of the fixed bias, which maintains it in the operating condition, and the bias developed across R110 by the output of the diode in the squelch oscillator circuit. This bias voltage tends to drive the grid in the negative direction into the cutoff region. The fixed bias is developed at the filament by the filament supply voltage. The operation of the squelch circuit is described in paragraph 40.

d. Another circuit, associated with the grid (pin 3) of V115, serves to cut off the audio-amplifier stages during transition periods from the transmit to the receive conditions of the receiver-transmitter. The circuit extends through R181, a pair of normally open contacts (2–3) of relay O1 to ground, and from the moving contact (terminal 3) of O1 through capacitor C78 to another pair of normally open contacts (5–4) of relay O1. These latter contacts are in the voltage supply circuit for the screen grid of transmitting power amplifier

V11. Capacitor C78 and resistors R173, R174, R109, R110, and R181 constitute a charging and discharging path. During transmit intervals, when relay O1 is energized, contacts 5–4 connect +250 volts to the screen of V11 and to one side of C78. Contacts 2–3 connect ground to the other side of C78. During the transmit period, C78 charges to +250 volts. When, at the end of the transmit period, contacts 4–5 and 2–3 of relay O1 open, the charging potential is disconnected from C78; that capacitor discharges through resistors R181, R173, R174, R109, and R110; and a negative voltage is developed at the grid of V115. This voltage is large enough to cut off V115, and is applied to V115 long enough to permit the squelch oscillator to become fully operative and, in turn, apply normal squelch bias to cut off the audio circuits. This is necessary to prevent the audio tubes from being operative after transmission has ceased, and the squelch oscillator has not as yet built up a high enough output voltage to provide cutoff bias to them.

e. The amplified output is coupled through transformer T114 over two paths. The signal voltage developed across winding 7–8–9 is applied through pins 8 of J106 and P306 to terminals A of the AUDIO connectors for use with a headset, or the earpiece of a handset, and to terminal E of the REC-TR CONTROL connector. The signal voltage developed across winding 4–5–6 of T114 is applied in push-pull to the grid circuits of power amplifier V116.

f. Plate and screen voltages for V115 (fig. 38) are obtained through terminals 5 of J106 and P306 and terminals H of J312 and J309. The 85-volt supply applied to the above terminals is routed from B of J309, through terminal 7 of J106 and P306, through resistor R1.77 and terminals 2 of J106 and P306, back to terminals J of J312 and J309. When an external connection is placed between terminals H and J of J312 or J309, plate and screen voltages are applied to V115. The connection between H and J of J312 or J309 may be a jumper strap, the contacts of an external relay, the coil of an external relay, or the contacts of a switch. The exact nature of the connection depends on the arrangement of the particular system in which the unit is used. Note that no plate or screen voltage exists at the tube pins unless this connection is made. Also note that if the coil of a relay is connected between these terminals, the relay will be energized when V115 draws plate current and will be de-energized when V115 plate current is cut off. The coil should not exceed 1,000-ohms resistance and should be shunted by a suitable capacitor. When the receiver is in the standby condition, and the squelch circuit cuts off the audio-amplifier plate current, a relay thus connected will be de-energized. When an incoming signal cuts off the squelch circuit and V115 plate current begins to flow, the external relay will become energized. This arrangement is used when the receiver-transmitter is used with accessory equipment requiring such control.

g. Capacitor C200, in series with R178, shunts the primary winding of R114 to de-emphasize the h-f end of the audio band and to reduce the noise voltages which may be present at that end of the audio band. Capacitor C203 in the grid circuit bypasses squelch bias resistors R110 and R109 for audio signals.

h. Circuit differences are as follows:

(1) In all RT–66/GRC models, except those bearing Order No. 1759–Phila–51 and early models bearing Order No. 18651–Phila–49 (fig. 31), the circuit containing capacitor C78 and the contacts of relay O1 is connected to the junction of resistors R109 and R174 through terminals 12 of J108 and P308, and terminals 4 of P304 and J4 instead of through the indicated terminals and resistor R181. Operation of the circuit is the same as explained in *d* above, except that capacitor C78 will discharge through resistors R109 and R110 at the end of the transmit period instead of through resistors R173, R174, R109, and R110. Cutoff voltage for the audio tubes therefore will be developed across R109 and R110 instead of across all of the resistors mentioned above. In early RT–66/GRC models, capacitor C78, terminals 5 of J5 and P305, and terminals 11 of P308 and J108, are not used.

(2) In the following RT–67/GRC models (fig. 30), the circuit containing capacitor C78 and the contacts of relay O1 is connected to the junction of resistors R109 and R174 through terminals 5 of J5 and P305 and terminals 11 of P308 and J108.

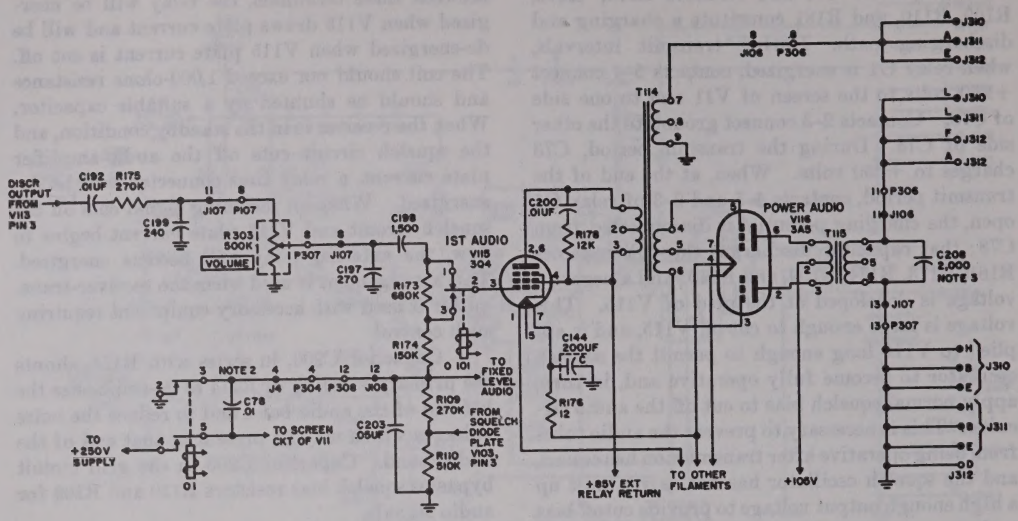

NOTES:

1. SEE THE APPROPRIATE MAIN SCHEMATIC DIAGRAM FOR EXACT VALUES OF RESISTORS R110 AND R175, AND CAPACITOR C199.
2. IN EARLY RT-66/GRC MODELS BEARING ORDER NO. 18651-PHILA-49, CAPACITOR C78, TERMINALS 4 OF J4 AND P304, AND TERMINALS 12 OF P308 AND J108 ARE NOT USED.
   IN RT-66/GRC MODELS BEARING ORDER NO. 1759-PHILA-51, THE CIRCUIT CONTAINING CAPACITOR C78, THE CONTACTS OF RELAY O1, TERMINALS 12 OF J108 AND P308, AND TERMINALS 4 OF P304 AND J4, IS CONNECTED TO THE GRID, PIN 3 OF V115, THROUGH RESISTOR R181, 470K (ADDED), INSTEAD OF THE JUNCTION OF RESISTORS R109 AND R174.
3. CAPACITOR C208 IS USED ONLY IN MODELS BEARING ORDER NO. 1759-PHILA-51.
4. UNLESS OTHERWISE SHOWN, RESISTORS ARE IN OHMS, CAPACITORS ARE IN UUF.

TM 289-C1-218

Figure 31. First audio amplifier and power audio amplifier, functional diagram for RT-66/GRC models.

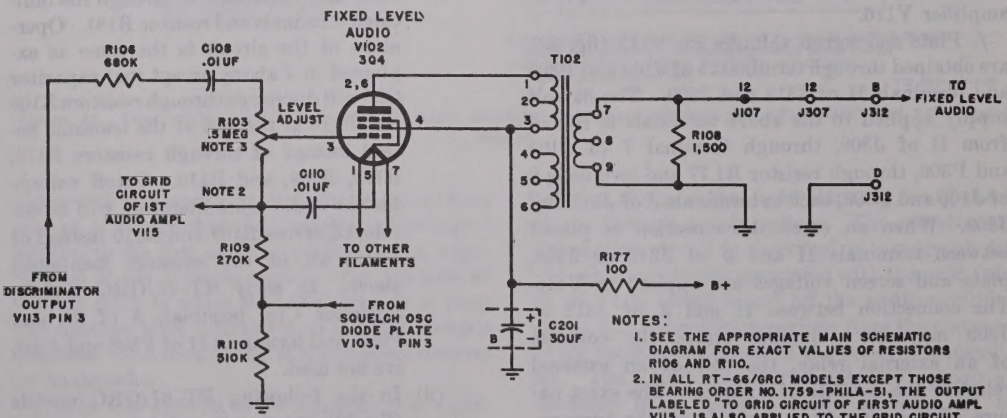

NOTES:

1. SEE THE APPROPRIATE MAIN SCHEMATIC DIAGRAM FOR EXACT VALUES OF RESISTORS R106 AND R110.
2. IN ALL RT-66/GRC MODELS EXCEPT THOSE BEARING ORDER NO. 1759-PHILA-51, THE OUTPUT LABELED "TO GRID CIRCUIT OF FIRST AUDIO AMPL V115" IS ALSO APPLIED TO THE GRID CIRCUIT OF RECEIVER R-F AMPLIFIER V1.
3. IN EARLY RT-66/GRC MODELS BEARING ORDER NO. 18651-PHILA-49, RESISTOR R104, 1 MEG, IS USED IN SERIES WITH THE LINE CONNECTED TO THE BOTTOM OF POTENTIOMETER R103.
4. UNLESS OTHERWISE SHOWN, RESISTORS ARE IN OHMS, CAPACITORS ARE IN UUF.

TM 289-C1-206

Figure 32. Fixed level audio amplifier, functional diagram.

Resistor R181 is not used. Operation of the circuit is the same as indicated in (1) above.

Order No.	Serial No.
16831–Phila–51	All.
18651–Phila–49	All.
32111–Phila–51	1–13671.

(3) In all RT–66/GRC models (fig. 31), and in the following RT–67/GRC and RT–68/GRC models (fig. 30), capacitor C197 is connected between ground and the junction of terminal 8 of J107 and capacitor C198. C197 aids C198 in its function as a de-emphasis capacitor (*a* above).

Model	Order No.	Serial No.
RT–67/GRC	16831–Phila–51	All.
	18651–Phila–49	All.
	32111–Phila–51	7250 and up.
RT–68/GRC	16817–Phila–51	9674 and down.
	16821–Phila–51	16666 and down.
	18651–Phila–49	All.

38. Power Audio Amplifier V116 (fig. 30)

a. The power audio-amplifier stage uses type 3A5 twin triode tube V116 in a class B push-pull amplifier. The signal voltage developed across the secondary winding (terminals 4–5–6) of interstage transformer T114 is applied in push-pull to the grids (pins 3 and 5) of V116. The amplified signals developed across the center-tapped primary winding of output transformer T115 is induced in the secondary winding (terminals 4–5–6) of power output transformer T115 and is routed through terminals 11 of J106 and P306 to terminals L of AUDIO connectors J310 and J311, and to terminals A and F of REC-TR CONTROL connector J312, for connection to a loudspeaker.

b. Capacitor C208 is shunted across output winding 4–5–6 of transformer T115 to prevent regeneration when a loudspeaker is connected to the power audio stage. The regeneration is produced by feedback between wires connected to the audio receptacles.

c. Plate voltage for V116 is applied to the center tap (terminal 2) of T115 from the 105–volt tap on the associated power supply unit. This voltage is routed (fig. 38) from pin M of POWER IN connector J309 through pins 3 of P306 and J106 to the center tap of the transformer.

d. Capacitor C208 is used in the following models only:

Model	Order No.	Serial No.
RT–66/GRC	1759–Phila–51	All.
RT–68/GRC	32114–Phila–51	38051 and up.

39. Fixed Level Audio Amplifier V102 (fig. 32)

a. The fixed level audio amplifier V102 uses a type 3Q4 pentode tube in a class A audio-amplifier circuit. Audio signals developed across the output of the discriminator circuit are routed through resistor R106 and capacitor C108 to level adjust control R103, the movable arm of which is connected to the grid (pin 3) of V102. This control is adjusted during manufacture and should not be touched unless the output of this stage does not meet the requirements given in paragraph 5*c*. The grid circuit includes screwdriver adjustment potentiometer R103, located on the i-f chassis, and resistors R109 and R110. Resistor R110 acts as the load for the squelch diode rectifier in the squelch oscillator circuit (par. 40). Under no-signal conditions, the diode of V103 develops a voltage across R110, the magnitude and polarity of which are such as to cut off plate current flow in fixed level audio amplifier V102. This cutoff bias is removed when an incoming signal cuts off plate current in the squelch oscillator tube. Refer to paragraph 40 for squelch circuit details. The grid circuit is returned to the filament center tap through bypass capacitor C110. Resistor R106 and capacitor C108 serve as a noise filter and a decoupling circuit.

b. Plate and screen potentials are obtained from the 85-volt receiver supply by connection through a filter composed of resistor R177 and capacitor C201B.

c. The output of V102 is applied through winding 7–8–9 of T102 and terminals 12 of J107 and P307 to terminal B of J312. Load resistor R108, across the secondary winding of T102, serves to

stabilize the effective output impedence of the amplifier for changes in external loading.

d. Circuit differences are as follows:

(1) In all RT–66/GRC models except those bearing Order No. 1759–Phila–51, the squelch voltage applied to the grid circuit of first audio amplifier V115 is also applied to the grid circuit of receiver r-f amplifier V1. Thus, when the fixed level audio and first audio amplifiers are cut off by the squelch circuit, the gain of receiver r-f amplifier V1 is reduced.

(2) In early RT–66/GRC models bearing Order No. 18651–Phila–49, resistor R104 is used in series with the line connected to the bottom of potentiometer R103.

40. Squelch Circuit V103

(fig. 33)

a. The squelch circuit uses a type 1S5 tube V103. The tube combines a pentode and diode in one envelope. The pentode is arranged to form a modified tubed-plate, tuned-grid oscillator. The diode rectifies the oscillator output. The purpose of this circuit is to keep the audio circuits at cutoff during no-signal conditions of the receiver and to turn on the audio amplifiers when a signal enters the receiver. Details of operation of the squelch circuit are described in *b* below.

b. The oscillator circuit includes the grid winding (terminals 3–4) shunted by damping resistor R179 and the plate winding (terminals 1–2) of L108. Terminal 1 of L108 is connected to the plate (pin 5) of V103. Terminal 2 is connected to voltage-dropping resistor R172 in the plate supply lead. No capacitor is shown connected across the two coils, since tuning is accomplished by the interelectrode capacity of the tube and the stray capacity in the wiring. The oscillator generates a signal at a frequency of approximately 30 kc. Regenerative feedback, necessary to sustain oscillations, is established partially through leakage across the shield between the plate and grid windings of L108, partially through the electron coupling within the tube, and in large part through coupling capacitor C204, which is connected between the plate (pin 5) and the grid (pin 6) of V103. The plate circuit is returned to ground for r-f through capacitor C205, which is connected from ground to the junction of L108 and resistor R172. The grid circuit of the oscillator is returned to ground for d-c through grid resistor R113, and for ac through capacitor C118. It also is connected through R111, to the grid (pin 6) of first limiter V111, and through R184 to the grid (pin 6) of second limiter V112. Resistors R111 and R113 act as a voltage divider for the d-c voltage developed in the grid circuit of V111. Resistors R184 and R113 act as a voltage divider for the d-c voltage developed in the grid circuit of V112. Since R113 is common to the grid circuits of V111 and V112, the voltage drops across R113 are combined into a single voltage. This voltage is applied as negative bias to the grid of V103.

(1) The action of the squelch biasing circuit depends on the relative grid current flow characteristics of the first and second limiter stages for various noise and signal input levels to the receiver. In effect, the d-c grid voltages contributed by the two stages to the combined squelch biasing voltage complement each other. At no-signal and low-level signal voltages, the current flow in the grid circuit of V111 is very low. Grid current flow increases gradually as the incoming signal strength is increased. It does not reach saturation until fairly strong signals are received. Under no-signal and low-level signal conditions, the rectified grid current flow of V112 is larger than that of V111. The V112 grid current flow increases as the signal strength increases and reaches saturation for relatively low-level signals.

(2) When no signal is present in the receiver, the noise voltages appearing at the input to V111 cause grid current (dc) to flow and cause a voltage drop across R113. Similarly, the noise voltages appearing at the input to V112 cause grid current to flow there and cause a corresponding voltage drop across R113. The combined voltage developed across R113 and applied to the grid of V103 as a negative bias is low enough to permit V103 to continue oscillations. A-c components of this bias voltage are filtered out.

(3) When a signal enters the receiver, the grid current flow in V111 increases gradually. The current flow through the grid circuit of V112 increases rapidly. The resultant negative bias voltage developed

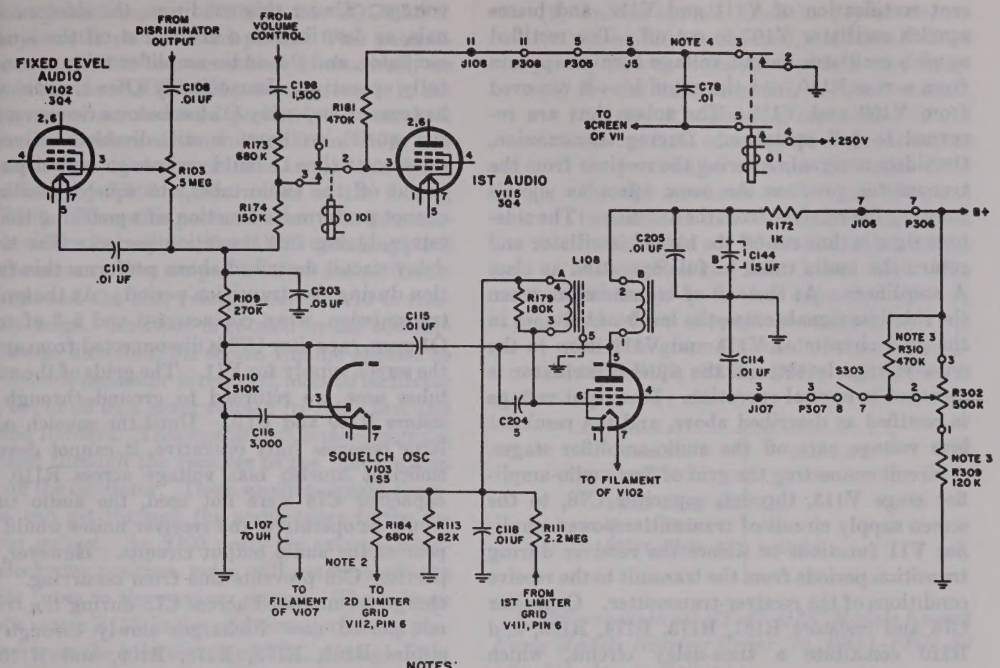

NOTES:

1. SEE THE APPROPRIATE MAIN SCHEMATIC DIAGRAM FOR EXACT VALUES OF RESISTORS R111 AND R113.
2. IN THE FOLLOWING MODELS, CONTROL VOLTAGE FOR THE SQUELCH OSCILLATOR IS OBTAINED ONLY FROM THE GRID, PIN 6 OF FIRST LIMITER V111. THE INPUT CIRCUIT CONTAINING RESISTOR R184 AND LABELED SECOND LIMITER GRID, V112, PIN 6, IS NOT USED.

MODEL	ORDER NO.	SERIAL NO.
RT-67/GRC	16831-PHILA-51	ALL
	18651-PHILA-49	ALL
	32111-PHILA-51	1-7,249
RT-68/GRC	16817-PHILA-51	9,675 AND DOWN
	16821-PHILA-51	16,668 AND DOWN
	18651-PHILA-49	1-1,882

3. IN ALL MODELS LISTED ABOVE, RESISTOR R310 IS NOT USED, AND RESISTOR R309 IS REPLACED WITH A WIRE STRAP.
4. IN THE FOLLOWING RT-67/GRC MODELS, THE CIRCUIT CONTAINING CAPACITOR C78 AND THE CONTACTS OF RELAY 01 IS CONNECTED TO THE JUNCTION OF RESISTORS R109 AND R174 THROUGH TERMINALS 5 OF J5 AND P305, AND TERMINALS 11 OF P308 AND J108 INSTEAD OF TO THE GRID OF V115 THROUGH RESISTOR R181. RESISTOR R181 IS NOT USED.

ORDER NO.	SERIAL NO.
16831-PHILA-51	ALL
18651-PHILA-49	ALL
32111-PHILA-51	1-13,671

5. UNLESS OTHERWISE SHOWN, RESISTORS ARE IN OHMS, CAPACITORS ARE IN UUF.

TM 289-CI-207

Figure 33. Squelch circuit, functional diagram for RT–67/GRC and RT–68/GRC models.

across R113 and applied to the grid of V103 is now large enough to bias the oscillator to cut off, and oscillations cease.

c. The output of the oscillator is coupled through capacitor C115 to the plate (pin 3) of the diode section of V103. When the oscillator is operative, this signal is rectified by the diode circuit. The rectified voltage is developed across diode load resistor R110. The return circuit for these voltages is established through ground, the filament of V107, and pin 1 of V103 (fig. 37).

d. The voltage developed across R110 is applied over two paths: to fixed level audio amplifier V102, and to first audio amplifier V115. Diode load resistor R110 is common to the grid circuits of V102 and V115. The grid circuit of V102 extends through potentiometer R103, resistor R109, and through squelch diode load resistor R110. The grid circuit of V115 extends through resistors R173, R174, and R109 to diode load resistor R110. The rectified squelch oscillator voltage developed across R110 therefore is applied effectively to both audio tubes, V102 and V115, and serves to bias these tubes to cut off. This condition prevails as long as no signal enters the receiver and as long as the squelch oscillator is operative. An on-frequency signal entering the receiver increases the bias provided by grid cur-

rent rectification of V111 and V112, and biases squelch oscillator V103 to cut off. The rectified squelch oscillator output voltage then disappears from across R110, and the cutoff bias is removed from V102 and V115. The tubes thus are returned to full operation. During transmission, the sidetone signals entering the receiver from the transmitter produce the same effect as signals entering the receiver from the antenna. The sidetone signals thus cut off the squelch oscillator and return the audio tubes to full operation as class A amplifiers. At the end of transmission, when the sidetone signals cease, the levels of voltages in the grid circuits of V111 and V112 drop to the noise-voltage levels, and the squelch oscillator is returned to normal operation. Its output voltage is rectified as described above, and the resultant bias voltage cuts off the audio-amplifier stages. A circuit connecting the grid of first audio-amplifier stage V115, through capacitor C78, to the screen supply circuit of transmitter power amplifier V11 functions to silence the receiver during transition periods from the transmit to the receive conditions of the receiver-transmitter. Capacitor C78 and resistors R181, R173, R174, R109, and R110 constitute a time-delay circuit, which charges during transmit periods and starts discharging immediately after the opening of contacts 2–3 and 4–5 of relay O1 disconnects the screen supply voltage from across C78. The discharge of C78 places a negative voltage on the grids of V115 and V102, which drives these tubes to cut off as described in *e* below.

e. The grid of V115 is connected through R181, terminals 11 of J108 and P308, terminals 5 of P305 and J5, and the normally open contacts 2–3 of relay O1 to ground. The armature (contact 3) of the relay is connected through capacitor C78 to the screen circuit of V11. Normally open contacts 4–5 of relay O1 connect (when closed) screen supply voltage to this circuit. During receive and standby conditions of the set, when relay O1 is de-energized, the contacts of the relay are open, and the circuit associating the screen of V11 with the grid of V115 (C78 and R181) has no function. When the relay becomes energized for transmission purposes, contacts 4–5 connect the screen supply voltage (+250 volts) to the screen of V11 and to one side of capacitor C78. Contacts 2–3 connect the other side of the voltage to C78 (through ground); the capacitor, therefore, charges up to the full value of the supply voltage. Under this condition, the sidetone signals, as described in *d* above, cut off the squelch oscillator, and the audio-amplifier tubes are made fully operative. Immediately after transmission has ceased, and relay O1 has become de-energized, the squelch oscillator is still disabled. Since it takes some time to build up enough output power to cut off the audio tubes, the squelch oscillator cannot perform its function of squelching the receiver during this transition period. The time-delay circuit described above performs this function during this transition period. At the end of transmission, when contacts 4–5 and 2–3 of relay O1 open, capacitor C78 is disconnected from across the screen supply for V11. The grids of the audio tubes now are returned to ground through resistors R109 and R110. Until the squelch oscillator becomes fully operative, it cannot develop sufficient squelsh bias voltage across R110. If capacitor C78 were not used, the audio tubes would be operative, and receiver noises would appear at the audio output circuits. However, capactitor C78 prevents this from occurring. The charge accumulated across C78 during the transmit period now discharges slowly through resistors R181, R173, R174, R109, and R110 to ground, and from ground through the interelectrode capacitance and screen bypass capacitor C72 of V11 to the other side of C78. For the duration of this discharge, a voltage thus is developed at the grids of V102 and V115. The polarity of this voltage is negative with respect to ground, and the magnitude of this voltage is such as to cut off these tubes. Before C78 discharges completely, the output of the squelch oscillator reaches a high enough level to raise the squelch diode output voltage to a value sufficient to maintain the audio in the cutoff condition.

f. Plate voltage for the oscillator section of V103 is applied through resistor R172, which is bypassed by ripple filter capacitor C144B and r-f bypass capacitor C205, and through the secondary winding of coil L108B. Screen voltage is obtained from the 85-volt source through potentiometer R302 and switch S303. SQUELCH control potentiometer R302, in series with voltage-dropping resistor R309, is shunted across the 85-volt supply, and serves as a voltage divider for the screen supply for V103. Resistor R310, shunted between the B+ side and the arm of the potentiometer, serves to provide for more uniform changes in applied screen voltage with changes in the setting

of the potentiometer. R302 is the SQUELCH potentiometer on the front panel. This potentiometer and S303 are assembled mechanically so that when the SQUELCH potentiometer is in the extreme counterclockwise position, the switch is open and removes screen voltage from V103; this disables the squelch circuit. The level of the signal generated by V103 is determined by the setting of R302. When this potentiometer is in its maximum clockwise position, the full 85 volts is applied to the screen. The output level of the oscillator is high and the bias voltage across R110 is relatively large. As R302 is rotated in the counterclockwise direction, the screen voltage applied to the squelch oscillator is reduced, and the oscillator can be cut off by a lower voltage from the first and second limiters. This means that smaller signals, applied through the receiver to the limiters, can cut off the oscillator. These smaller signals, therefore, can get through the audio tubes to the receiver output. As R302 nears the extreme counterclockwise position, noise will get through the audio tubes to the receiver output. The voltage drops across R113, in the grid circuit of V103, provided from the grid circuit of V111 through R111 and from V112 through R184, set the bias voltage applied to the grid of V103 to the required value. Filament voltage is applied through isolating coil L107 to pin 1 of V103. L107 is bypassed by capacitor C116. The other side of the filament (pin 7) of V103 is connected to the filament (pin 1) of V102.

g. Differences in RT–67/GRC and RT–68/GRC models (fig. 33) are as follows:

(1) In the models listed below, control voltage for the squelch oscillator is obtained only from the grid, pin 6 of first limiter V111. The input circuit containing resistor R184 and labeled to 2D LIM GRID V–112, PIN 6, is not used (*b* above).

Model	Order No.	Serial No.
RT–67/GRC	16831–Phila–51	All.
	18651–Phila–49	All.
	32111–Phila–51	1–7249.
RT–68/GRC	16817–Phila–51	9675 and down.
	16821–Phila–51	16668 and down.
	18651–Phila–49	1–1882.

(2) In the models listed in (1) above, resistor R310 is not used, and resistor R309 (*f* above) is replaced with a wire strap.

(3) In the following RT–67/GRC models, the circuit containing capacitor C78 and the contacts of relay O1 is connected to the junction of resistors R109 and R174 through terminals 5 of J5 and P305, and terminals 11 of P308 and J108 instead of to the grid of V115 through resistor R181. Resistor R181 is not used. The discharge path for capacitor C78 is, therefore, through resistors R109 and R110 to ground instead of through resistors R173, R174, R109, and R110 to ground (*e* above).

Order No.	Serial No.
16831–Phila–51	All.
18651–Phila–49	All.
32111–Phila–51	1–13671.

h. Differences in all RT–66/GRC Models Except Early Models Bearing Order No. 18651–Phila–49 (fig. 34) Are as Follows:

(1) In all models except those bearing Order No. 1759–Phila–51, squelch voltage is applied to r-f amplifier V1, as well as to first audio amplifier V115 and fixed level audio V102. The grid resistors of the r-f amplifier (R54 and R55) are in parallel with squelch diode output resistors R109 and R110; therefore, squelch voltage is applied to the r-f amplifier, as well as to the audio tubes, during periods when no signal is being received (*d* above). The squelch voltage reduces the gain of the r-f amplifier and cuts off the first audio and fixed level audio tubes.

(2) In all models except those bearing Order No. 1759–Phila–51, the circuit containing capacitor C78 and the contacts of relay O1 is connected to the junction of resistors R109 and R174 through terminals 4 of J4 and P304, and terminals 12 of P308 and J108 instead of to the grid of V115 through terminals of 5 J5 and P305, terminals 11 of P308 and J108, and resistor R181. Resistor R181 is not used. The discharge path for capacitor C78 is,

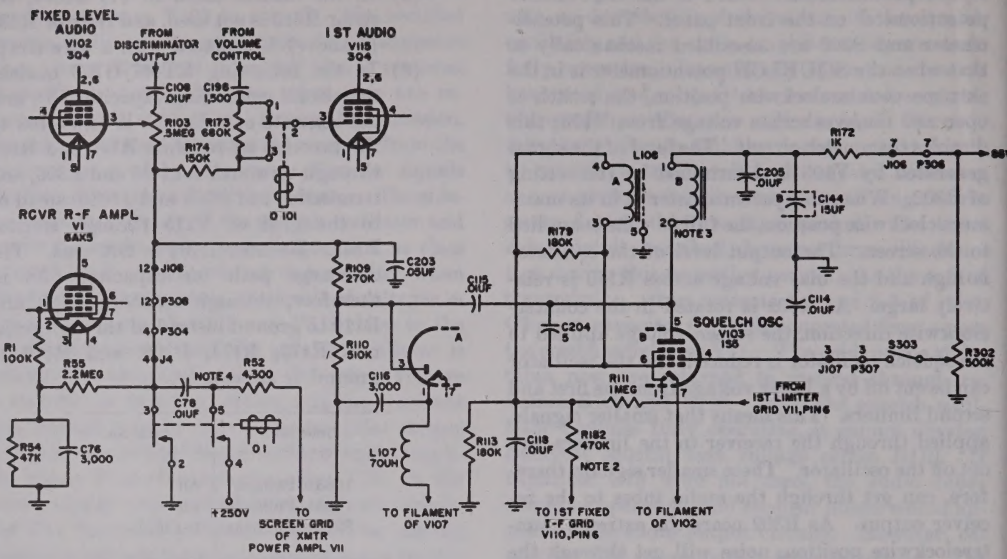
FIXED LEVEL AUDIO V102 304
FROM DISCRIMINATOR OUTPUT
FROM VOLUME CONTROL
1ST AUDIO V115 304
RCVR R-F AMPL V1 6AK5
SQUELCH OSC V103 13S
FROM 1ST LIMITER GRID V11, PIN6
TO SCREEN GRID OF XMTR POWER AMPL V11
TO FILAMENT OF V107
TO 1ST FIXED I-F GRID V110, PIN 6
TO FILAMENT OF V102
+250V
NOTE 2
NOTE 3
NOTE 4

NOTES:

1. SEE THE APPROPRIATE MAIN SCHEMATIC DIAGRAM FOR EXACT VALUES OF RESISTORS R52 AND R54.
2. THE INPUT CIRCUIT CONTAINING RESISTOR R182 AND LABELED TO 1ST FIXED I-F GRID V110, PIN 6, IS USED IN THE FOLLOWING MODELS ONLY:

MODEL	ORDER NO.	SERIAL NO.
RT-66/GRC	1759-PHILA-51 21434-PHILA-50	ALL ALL
	32137-PHILA-51	ALL
	32138-PHILA-51	ALL
	32138-PHILA-51	2716 AND UP

3. IN RT-66/GRC MODELS BEARING ORDER NO. 21434-PHILA-50 TERMINALS 1 AND 2 OF CHOKE L108B ARE REVERSED.
4. IN RT-66/GRC MODELS BEARING ORDER NO. 1759-PHILA-51, RESISTORS R54 AND R55, AND CAPACITOR C76 ARE DELETED, RESISTOR R1 IS CONNECTED DIRECTLY TO GROUND, AND THE CIRCUIT CONTAINING CAPACITOR C78 AND THE CONTACTS OF RELAY O1 IS CONNECTED TO THE GRID, PIN 3 OF V115, THROUGH TERMINALS 4 OF J4 AND P304, TERMINALS 12 OF P308 AND J108, AND RESISTOR R181, 470K, INSTEAD OF TO THE JUNCTION OF RESISTORS R109 AND R174 THROUGH THE INDICATED TERMINALS.
5. UNLESS OTHERWISE SHOWN, RESISTORS ARE IN OHMS, CAPACITORS ARE IN UUF.

TM 289-CI-208

Figure 34. Squelch circuit, functional diagram for all RT-66/GRC models except early models bearing Order No. 18651-Phila-49.

therefore, through resistors R109 and R110 to ground instead of through resistors R173, R174, R109, and R110 to ground (*d* above).

(3) In all models, resistor R310 is not used, and resistor R309 is replaced with a wire strap (*f* above).

(4) In models bearing the following order numbers, the input circuit containing resistor R184 and labeled 2D LIM GRID, V-112, PIN 6 is replaced with a similar circuit containing resistor R182, 470K, and labeled to 1ST FIXED I-F GRID V-110, PIN 6. Control voltage for the squelch oscillator therefore is developed by first fixed i-f amplifier V110 and first limiter V111, instead of by first and second limiters V111 and V112 (*b* above) respectively. In all other models, control voltage for the squelch oscillator is developed by first limiter V111 only.

Model	Order No.	Serial No.
RT-66/GRC	1759-Phila-51	All.
	21434-Phila-50	All.
	32137-Phila-51	All.
	32138-Phila-51	2716 and up.

(5) In models bearing Order No. 21434-Phila-50, terminals 1 and 2 of choke L108B are reversed.

(6) In RT-66/GRC models bearing Order No. 1759-Phila-51, resistors R54 and R55 and capacitor C76 are deleted. Resistor R1 is connected directly to ground, and

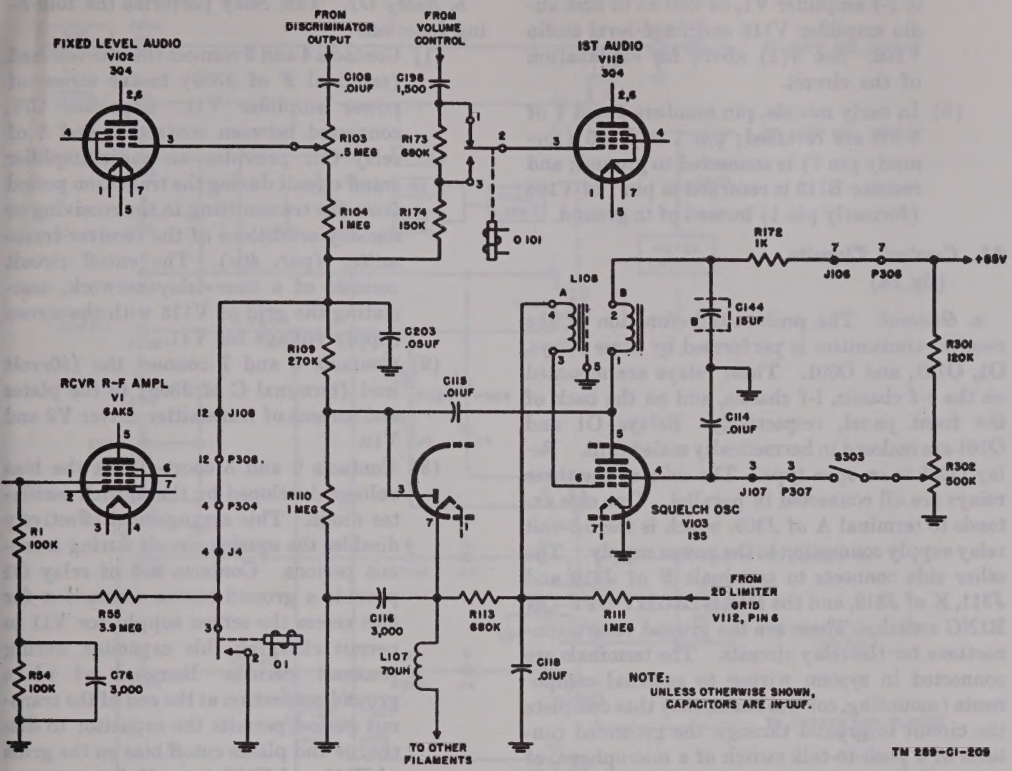

Figure 35. Squelch circuit, functional diagram for early RT–66/GRC models bearing Order No. 18651–Phila–49.

receiver r-f amplifier V1 no longer is connected to the squelch circuit. V1 therefore operates at a slightly negative bias produced by contact potential.

(7) In RT–66/GRC models bearing Order No. 1759–Phila–51, the circuit containing capacitor C78 and the contacts of relay O1 is connected to the grid, pin 3 of first audio amplifier V115 through terminals 4 of J4 and P304, terminals 12 of P308 and J108, and resistor R181, 470K, instead of to the junction of resistors R109 and R174 through the indicated terminals. Operation of the circuit is discussed in *d* above.

i. Differences in RT–66/GRC models bearing Order No. 18651–Phila–49 (fig. 35) are as follows:

(1) In early models, capacitor C78 is not used (*d* above).

(2) In early models, the V103 grid circuit label 1ST LIMITER GRID, V111, PIN 6 is changed to read: FROM 2D LIMITER GRID V–112, PIN 6; the label 2D LIM GRID, V112, PIN 6, and resistor R184 are deleted. Control voltage for the squelch oscillator therefore is developed by second limiter V112 only instead of by first and second limiters V111 and V112 (*b* above).

(3) In early models, capacitors C204 and C205 and resistor R179 are not used; resistor R301, 120K, is added in series with the wire connected to the top of potentiometer R302 (*b* above).

(4) In early models, resistor R104, I megohm, is added in series with the wire connected to the bottom of potentiometer R103.

(5) In all models, squelch voltages is applied

to r-f amplifier V1, as well as to first audio amplifier V115 and fixed level audio V102. See *h*(1) above for explanation of the circuit.

(6) In early models, pin numbers 1 and 7 of V103 are reversed; pin 1 of V103 (formerly pin 7) is connected to ground; and resistor R113 is returned to pin 7 of V103 (formerly pin 1) instead of to ground.

41. Control Circuits
(fig. 36)

a. General. The push-to-talk function of the receiver-transmitter is performed by three relays, O1, O101, and O301. These relays are mounted on the r-f chassis, i-f chassis, and on the back of the front panel, respectively. Relays O1 and O101 are inclosed in hermetically sealed cans. Relay O301 is an open type. The coils of the three relays are all connected in parallel. One side extends to terminal A of J309, which is the 5.6-volt relay supply connection to the power supply. The other side connects to terminals F of J310 and J311, K of J312, and the DIAL LIGHT OFF-ON RING switch. These are the ground return connections for the relay circuits. The terminals are connected in system wiring to external components (mounting, control boxes, etc.) that complete the circuit to ground through the grounded contacts of a push-to-talk switch of a microphone, of a control relay, or of a control switch. Normally, these ground return connections are open, and the relays are not energized, maintaining the receiver-transmitter in the receiving condition. When the microphone push-to-talk switch, the control relay, or the control switch is operated, ground return is applied and the relays become energized. Resultant transfer of the relay contacts performs the following basic functions:

(1) The antenna is transferred from the receiver to the transmitter.

(2) The power supply connections are opened for certain portions of the receiver, and power supply connections are made to the transmitter circuits.

(3) The d-c and a-c paths to the microphone input circuits are established. The receiver audio circuits are switched for reduced output as required for sidetone.

(4) A control lead connection is established to energize the transmitter power supply.

b. Relay O1. This relay performs the following functions:

(1) Contacts 4 and 5 connect the 250-volt lead (terminal F of J309) to the screen of power amplifier V11. Capacitor C78, connected between contacts 5 and 3 of relay O1, provides an audio-amplifier cutoff circuit during the transition period from the transmitting to the receiving or standby conditions of the receiver-transmitter (par. 40*e*). The cutoff circuit consists of a time-delay network, associating the grid of V115 with the screen supply voltage for V11.

(2) Contacts 6 and 7 connect the 150-volt lead (terminal C of J309) to the plates and screens of transmitter driver V9 and V10.

(3) Contacts 2 and 3 short-circuit the bias voltage developed by the squelch oscillator diode. This arrangement effectively disables the squelch circuit during transmit periods. Contacts 2–3 of relay O1 provide a ground return connection for C78 across the screen supply for V11 to permit charging this capacitor during transmit periods. Removal of this ground connection at the end of the transmit period permits the capacitor to discharge and places cutoff bias on the grids of V115 and V102 (par. 40*e*).

Note. The plate of V11 is not switched by relay contacts in the receiver-transmitter, but is connected directly to the 450-volt supply lead (terminal P of J309). However, no power is actually applied to any of the transmitter circuits (including the 450-volt circuits), until contacts 6 and 7 of relay O101 apply ground to terminal K of J312. This connection energizes a relay in Power Supply PP–109/GR or PP–112/GR, normally used to supply power to the receiver-transmitter. The power supply relay then becomes energized, and turns on the plate, screen, filament, microphone, and bias supply circuits. This arrangement insures that no power is applied to the transmitter circuits before the antenna load is connected, and that the high current drain transmitter supply circuits in the power supply are not energized before a load (the transmitter) is connected to them.

c. Relay O101. This relay performs the following functions:

(1) Contacts 1, 2, and 3 serve to adjust the level of the audio output during the re-

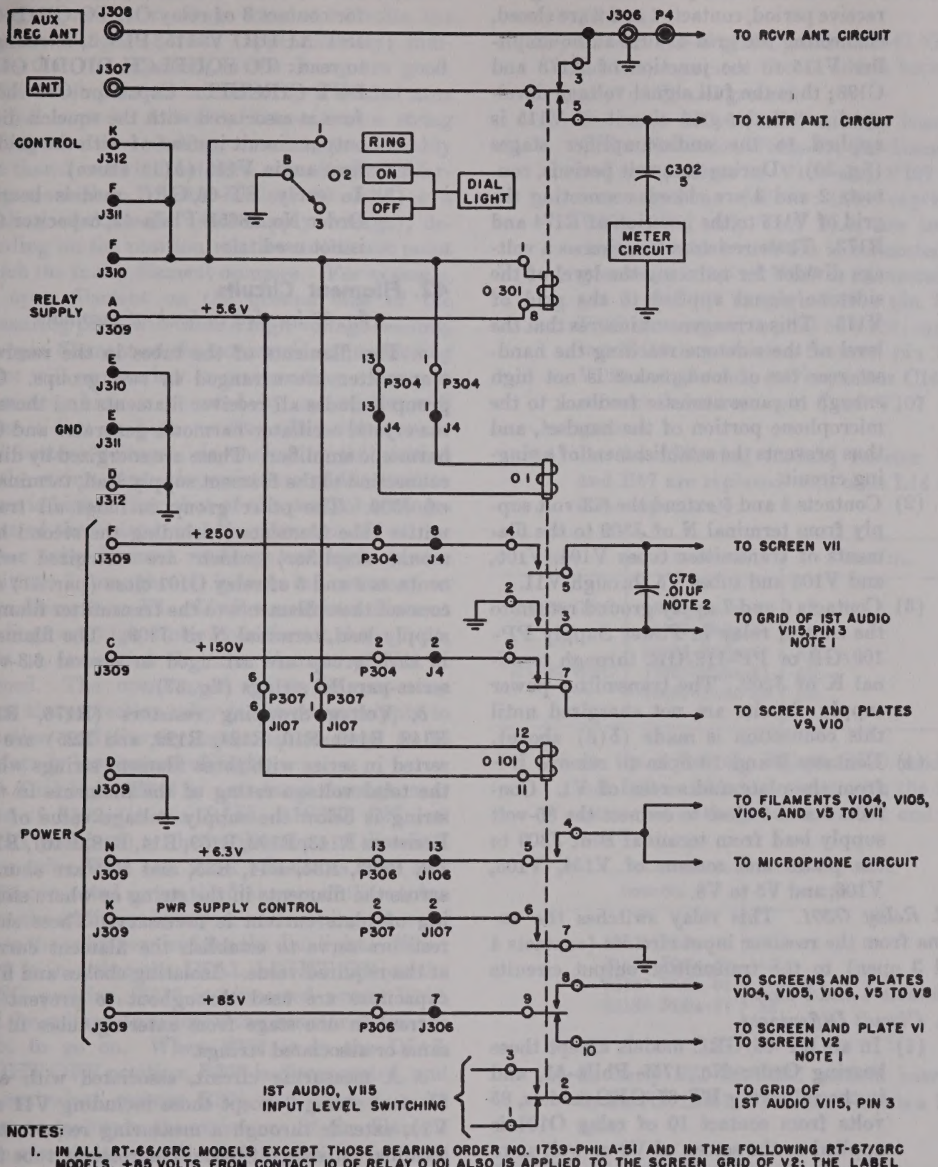

NOTES:

1. IN ALL RT-66/GRC MODELS EXCEPT THOSE BEARING ORDER NO. 1759-PHILA-51 AND IN THE FOLLOWING RT-67/GRC MODELS, +85 VOLTS FROM CONTACT 10 OF RELAY O 101 ALSO IS APPLIED TO THE SCREEN GRID OF V2; THE LABEL FOR CONTACT 3 OF RELAY O 1, TO GRID OF 1ST AUDIO, V115, PIN 3, IS CHANGED TO READ: TO SQUELCH DIODE OUTPUT CIRCUIT.

ORDER NO.	SERIAL NO.
16831-PHILA-51	ALL
18651-PHILA-49	ALL
32111-PHILA-51	1-13, 671

2. IN EARLY RT-66/GRC MODELS BEARING ORDER NO. 18651-PHILA-49, CAPACITOR C78 IS NOT USED.

TM 289-CI-210

Figure 36. Control circuits, functional diagram.

ceive and transmit periods. During the receive period, contacts 1 and 2 are closed, connecting the grid of first audio-amplifier V115 to the junction of R173 and C198; thus the full signal voltage developed across the grid circuit of V115 is applied to the audio-amplifier stages (fig. 30). During transmit periods, contacts 2 and 3 are closed, connecting the grid of V115 to the junction of R174 and R173. These resistors function as a voltage divider for reducing the level of the sidetone signal applied to the grid of V115. This arrangement insures that the level of the sidetone reaching the handset receiver or loudspeaker is not high enough to cause acoustic feedback to the microphone portion of the handset, and thus prevents the establishment of a singing circuit.

(2) Contacts 4 and 5 extend the 6.3-volt supply from terminal N of J309 to the filaments of transmitter tubes V104, V105, and V106 and tubes V5 through V11.

(3) Contacts 6 and 7 apply ground return to the control relay in Power Supply PP–109/GR or PP–112/GR, through terminal K of J309. The transmitter power supply circuits are not energized until this connection is made (*b*(3) above).

(4) Contacts 9 and 10 open to remove B+ from the plate and screen of V1. Contacts 8 and 9 close to connect the 85-volt supply lead from terminal B of J309 to the plates and screens of V104, V105, V106, and V5 to V8.

d. Relay O301. This relay switches the antenna from the receiver input circuits (contacts 4 and 3 open) to the transmitter output circuits (contacts 4 and 5 close).

e. Circuit Differences.

(1) In all RT–66/GRC models except those bearing Order No. 1759–Phila–51, and in the following RT–67/GRC models, 85 volts from contact 10 of relay O101 is applied to the screen of V2 as well as to the screen and plate of VI.

Order No.	Serial No.
16831–Phila–51	All.
18651–Phila–49	All.
32111–Phila–51	1–13671.

(2) In all models listed in (1) above, the label for contact 3 of relay O1, TO GRID OF 1ST AUDIO V–115, PIN 3, is changed to read: TO SQUELCH DIODE OUTPUT CIRCUIT. Capacitor C78 therefore is associated with the squelch diode output circuit instead of with the grid of first audio V115 (*b*(1) above).

(3) In early RT–66/GRC models bearing Order No. 18651–Phila–49, capacitor C78 is not used.

42. Filament Circuits

(*fig. 37 located in back of manual*)

a. The filaments of the tubes in the receiver-transmitter are arranged in two groups. One group includes all receiver filaments and those of the crystal oscillator-harmonic generator and first harmonic amplifier. These are energized by direct connection to the filament supply lead, terminal L of J309. The other group includes all transmitter tube filaments (including the second harmonic amplifier) which are energized when contacts 4 and 5 of relay O101 close (par. 41) and connect these filaments to the transmitter filament supply lead, terminal N of J309. The filaments in each group are arranged in several 6.3-volt, series-parallel strings (fig. 37).

b. Voltage-dropping resistors (R176, R107, R148, R149, R10, R124, R122, and R25) are inserted in series with those filament strings where the total voltage rating of the filaments in that string is below the supply voltage value of 6.3. Resistors R143, R102, R159, R14, R18, R161, R162, R9, R123, R34, R44, R35, and R45 are shunted across the filaments in the string or where shunting of plate current is necessary. These shunt resistors serve to establish the filament current at the required value. Isolating chokes and filter capacitors are used throughout to prevent a-c current in one stage from entering tubes in the same or associated strings.

c. A measuring circuit, associated with each filament string (except those including V11 and V1), extends through a measuring resistor to a terminal on switch S301. The receiver tube filaments are checked in positions 7 through 11 of that switch, while the transmitter tube filaments are checked in positions 2 through 6. When the switch is turned to any one of positions 2 through 11, the meter, in series with a measuring resistor, is connected between the approximate midpoint

of the string and chassis. Since each filament string represents a voltage drop of 6.3 volts, the meter reading of 3 volts (approximately) indicates that the filaments in the string are good. (The 3-volt point is indicated by a shaded area on the meter.) A broken filament in a string will cause a zero reading, a reading considerably less than 3 volts but not zero, a reading considerably more than 3 volts, but not 6.3 volts, or a reading of 6.3 volts (full supply voltage), depending on the position relative to the test point which the faulty filament occupies. For example, an open filament on the ground side of the measuring point will cause a high-voltage reading. An open filament on the battery side of measuring point will cause a low or zero reading. An open filament which is shunted by a resistor will cause a low or high reading (but not zero or full battery voltage), depending on its position in the string, since the resistance of the resistor alone is higher than that of the parallel arrangement of the resistor and the filament. If all receiver tube filament readings are high (meter positions 7 through 11), it is an indication of an open filament on V1. If all transmitter filament readings are high (meter positions 2 through 6), it is an indication that the filament of V11 is opened. The opening of either filament may cause the protection relay in the power supply to function and thereby cause all readings to be uniformly low instead of high.

d. Dial light E313 is associated through contacts of S302 (in the DIAL LIGHT ON and RING positions) with the filaments of discriminator tubes V113 and V114. Resistors R161 and R162, connected across the filaments of these tubes serve the additional purpose of dropping the voltage to the value required for the dial light. When S302 is in either the DIAL LIGHT ON or the RING position, E313 is connected across R162, and the voltage drop across this resistor causes the light to go on. When S302 is in the DIAL LIGHT OFF position, E303 is disconnected, and an equivalent resistor R304 is connected in its place to maintain the resistance of the filament string constant, regardless of the position of S302.

e. Circuit differences are as follows:

(1) In all RT–66/GRC and RT–67/GRC models except those bearing Order No. 1759–Phila–51, capacitor C64 is added between the bottom of resistor R47 and ground, and capacitor C63 is added between the bottom of resistor R48 and ground.

(2) In all RT–66/GRC and RT–67/GRC models, capacitor C50 is added between pin 7 of V8 and ground.

(3) In early RT–66/GRC models bearing Order No. 18651–Phila–49, the filaments and components of V103 and V107 are rearranged as follows: tube captions, V103, 1S5, and, V107 1L4, are interchanged; pin 1 of V103 is connected to ground; pin 1,5 of V107 is connected to pin 7 of V103 through L107; pin 7 of V107 is connected to pin 1 of V102; capacitor C116 is connected between pin 7 of V103 and ground; and capacitor C149 is connected between pin 7 of V107 and ground.

(4) In the following models, resistor R56 and R57 are replaced with coils L14 and L15 respectively.

Model	Order No.	Serial No.
RT–66/GRC	18651–Phila–49	All.
	32137–Phila–51	All.
	32138–Phila–51	All.
RT–67/GRC	16831–Phila–51	All.
	18651–Phila–49	All.

(5) In the following RT–66/GRC models, coil L20 is added in series with the line connected to the junction of C71 and pin 2 of V11.

Order No.	Serial No.
18651–Phila–49	All.
21434–Phila–50	All.
32137–Phila–51	1–6839.
32138–Phila–51	All.

(6) In early RT–66/GRC models bearing Order No. 18651–Phila–49, V110 is a 1U4 tube.

43. Plate Supply Circuits

(*fig. 38 located in back of manual*)

a. Receiver Supply Circuits. All receiver tubes, including the crystal oscillator-harmonic generator V3, and first harmonic amplifier V4, obtain their plate and screen potentials by direct connec-

tion to the 85-volt supply lead, terminal B of J309, except as follows:

(1) Screen voltage for squelch oscillator V103 is applied through SQUELCH potentiometer R302 and the contacts of SQUELCH switch S303. Adjustment of R302 varies the screen voltage of V103 and serves to vary the output level of the squelch oscillator. S303 is opened when R302 is in the extreme counterclockwise position, disconnecting screen voltage from V103 and disabling the squelch circuit. Resistor R309, which is in series with R302, and resistor R310, which is across the effective portion of R302, serve to provide for more uniform control of the applied screen voltage.

(2) Plate voltage for V2 is routed through interchassis coaxial cable connectors J101 and P1, which link the plate of V2 (on the r-f chassis) with the plate circuit components located on the i-f chassis.

(3) Plate and screen voltages for V1 are routed from terminal B of J309 over normally closed contacts 9 and 10 of relay O101. When this relay is de-energized, the contacts are closed and V115 is operative. When relay O101 is energized, contacts 9 and 10 open and the voltage is removed. Screen voltage for V2 is routed from the 85-volt supply, terminal B of J309, through terminals 6 of J4 and P304 and resistor R11.

(4) Power audio-amplifier tube V116 obtains its plate potential by direct connection to the 105-volt supply lead, terminal M of J309.

(5) Plate and screen voltage for V115 is applied when an external connection is placed between terminals J and H of J312 or J309. Terminal J of J312 connects internally to B of J309 (the 85-volt supply terminal), through resistor R177 in the plate of V102, while H of J312 connects to the plate and screen of V115. There is no internal connection between the plate and screen of V115 and the supply lead. The purpose of this arrangement is to permit adapting the receiver-transmitter for use in a retransmit circuit where an external device is to be controlled by a received signal. When this type of control is necessary, the coil of an external relay and bypass capacitor are placed between H and J of J312 or J309. When the receiver is in standby position, the external relay is de-energized, since the squelch circuit keeps the plate current of V115 at cutoff. When a signal enters the receiver, or when the SQUELCH switch S303, is opened, plate current flow in V115 energizes this relay which in turn functions to complete circuits in associated equipment.

b. Transmitter Supply Circuits (fig. 38). The plates and screens of all transmitter tubes, except V3 and V4, are energized only when relays O101 and O1 are operated (par. 41).

(1) All transmitter tubes, except the transmitter driver (V9 and V10), transmitter power amplifier (V11), and ringer tube V104B, are energized from the 85-volt supply when relay O101 becomes energized and closes contacts 8 and 9. When this occurs, the 85-volt supply lead (terminal B of J309) is transferred from the plate and screen of V1 to the plates and screens of V5 through V8, V105, V106 and the plate of V104A. The plate circuit of V104B (ringer oscillator) is connected to the RING position of S302. Thus, plate voltage for V104B is applied only when S302 is in the RING position. Other contacts of S302 in the RING position energize relays O1, O101, and O301 (par. 41).

(2) The plate and screen circuits of V9 and V10 extend through the normally open contacts (6 and 7) of relay O1 to the 150-volt supply lead, terminal C of J309.

(3) The screen circuit of V11 extends through normally open contacts 4 and 5 of relay O1 to the 250-volt supply lead, terminal F of J309.

(4) The plate circuit of V11 extends through plate coils L22 and L21 and measuring resistor R53 to the 450-volt supply lead terminal P of J309 (par. 41).

c. Circuit Differences.

(1) In all RT–66/GRC models, and in the following RT–67/GRC and RT–68/GRC models, resistor R310 is not used, and resistor R309 (*a*(1) above) is replaced with a wire strap.

Model	Order No.	Serial No.
RT–67/GRC	16831–Phila–51	All.
	18651–Phila–49	All.
	32111–Phila–51	1–7249.
RT–68/GRC	16817–Phila–51	9675 and down.
	16821–Phila–51	16666 and down.
	18651–Phila–49	1–1882.

(2) In all RT–66/GRC models except those bearing Order No. 1759–Phila–51, and in the following RT–67/GRC models, 85 volts is applied to the screen grid circuit through normally closed contacts 9 and 10 of relay O101, terminals 1 of J106 and P306, and terminals 9 of P304 and J4 instead of through terminals 6 of P304 and J4. Voltage therefore is removed from receiver first mixer V2 as well as from receiver r-f amplifier V1, when relay O101 is energized (*a*(3) above).

Order No.	Serial No.
16831–Phila–51	All.
18651–Phila–49	All.
32111–Phila–51	1–13671.

(3) In all RT–66/GRC models, coil L2 is substituted for coil L3 in the plate circuit of V1. The plate circuit therefore is shunt fed through L2 instead of series fed through tank coil L3.

(4) In all RT–66/GRC and RT–67/GRC models, and in RT–68/GRC models bearing Order No. 18651–Phila–49, damping resistors R20 and R24 are added in series with the plates of V4 and V5, respectively.

(5) In early RT–66/GRC models bearing Order No. 18651–Phila–49, resistor R301, 120K, is added in series with the wire connected to the top of potentiometer R302; resistor R129 is added in series with the wire connecting the bottom of transformer T105 and terminal 6 of J106. R301 and R129 are voltage-dropping resistors.

44. Measuring Circuit
(fig. 39)

a. The measuring circuit includes a 1-ma, d-c meter (M301), a 12-position test switch (S301), and a half-wave rectifier circuit. The meter dial is not calibrated; however, a shaded area on the dial face indicates the range of correct readings for all switch positions except the RF position.

b. Positions 2 through 11 of S301 connect the meter between the filament circuit measuring resistors (par. 42) and the chassis. The series arrangement of the meter and the measuring resistor is placed across the filament circuits for determining whether or not the tube filaments are broken. The measuring resistor extends the meter range for the particular measurement. Positions 2 through 6 are used to check all transmitter tube filaments, except that of V11. Positions 7 through 11 are used to check all receiver tube filaments, except V1 (par. 42*c*). These two tubes can be checked by visual inspection.

c. Position 12 (marked 90V on the panel) connects the meter in series with voltage-dropping resistor R307, across the 85-volt supply circuit (terminal B of J309 and chassis). Thus, in this position, the meter is used to check the presence of 85-volt plate supply at the receiver-transmitter power input terminals.

d. Position 1 (marked RF on the panel) is used to connect the meter across the output of the rectifier circuit for the purpose of determining the presence of transmitter power output. The rectifier circuit in turn is connected through capacitors C302 and C75 across the tuned transmitter antenna circuit. A type IN34, IN34A, IN43, or IN69 germanium cystal diode is used as a half-wave rectifier. Resistor R306 is the diode load, and also limits the current through the rectifier and the meter. C302 decouples the meter circuit from the antenna circuit; this prevents detuning. Series resistor R308 serves to isolate the rectifier circuit from the meter to insure uniform meter readings for variations in the back resistance of rectifier elements. This resistor also serves as a voltage-dropping resistor. Capacitor C304 is an r-f filter capacitor. Capacitor C75 couples the transmitter to the antenna and aids in obtaining the correct impedance match between the transmitter and antenna. The signal voltage developed across the antenna circuit is rectified and filtered and applied as a d-c potential across

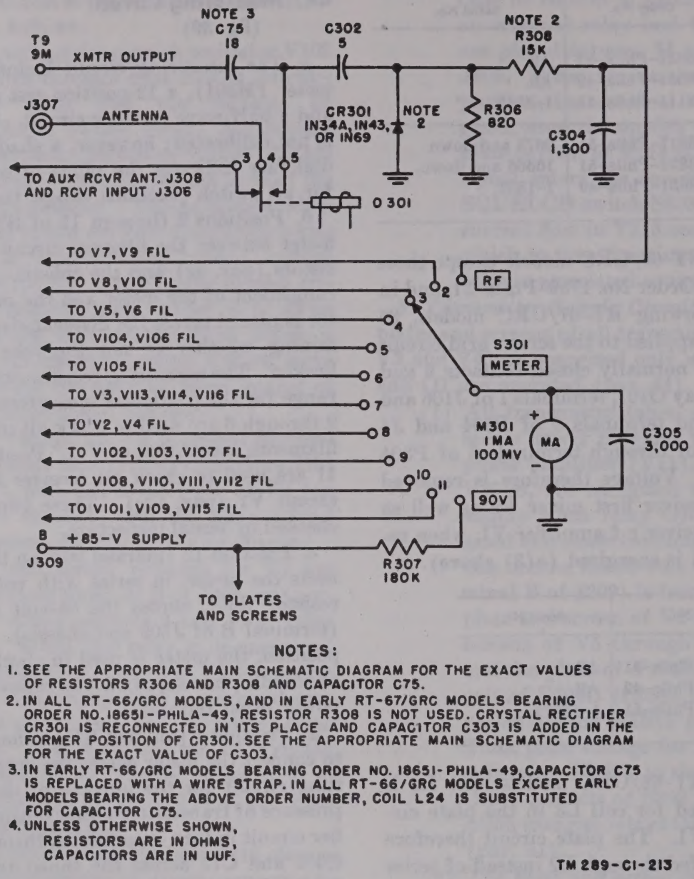

NOTES:

1. SEE THE APPROPRIATE MAIN SCHEMATIC DIAGRAM FOR THE EXACT VALUES OF RESISTORS R306 AND R308 AND CAPACITOR C75.
2. IN ALL RT-66/GRC MODELS, AND IN EARLY RT-67/GRC MODELS BEARING ORDER NO. 18651-PHILA-49, RESISTOR R308 IS NOT USED. CRYSTAL RECTIFIER CR301 IS RECONNECTED IN ITS PLACE AND CAPACITOR C303 IS ADDED IN THE FORMER POSITION OF CR301. SEE THE APPROPRIATE MAIN SCHEMATIC DIAGRAM FOR THE EXACT VALUE OF C303.
3. IN EARLY RT-66/GRC MODELS BEARING ORDER NO. 18651-PHILA-49, CAPACITOR C75 IS REPLACED WITH A WIRE STRAP. IN ALL RT-66/GRC MODELS EXCEPT EARLY MODELS BEARING THE ABOVE ORDER NUMBER, COIL L24 IS SUBSTITUTED FOR CAPACITOR C75.
4. UNLESS OTHERWISE SHOWN, RESISTORS ARE IN OHMS, CAPACITORS ARE IN UUF.

TM 289-CI-213

Figure 39. Measuring circuit, functional diagram.

the meter. The circuit components are such that, with proper antenna loading, a half-scale reading on the meter corresponds to 15 watts of r-f power across the antenna circuit.

e. Circuit differences are as follows:

(1) In all RT–66/GRC models, and in early RT–67/GRC models bearing Order No. 18651–Phila–49, crystal rectifier CR301 is substituted for resistor R308, and capacitor C303 (added) is connected in the position formerly occupied by crystal rectifier CR301. The crystal rectifier is therefore in series with the meter instead of in parallel with it. C303 is an r-f bypass capacitor. Operation of the circuit is the same as indicated in *d* above.

(2) In all RT–66/GRC models bearing Order No. 18651–Phila–49, capacitor C75 (*d* above) is replaced with a wire strap. In all RT–66/GRC models except those bearing the above order number, coil L24 is substituted for capacitor C75. L24 aids in impedance matching between the transmitter and antenna.

45. System Wiring

In addition to the circuits described in the preceding paragraphs, the receiver-transmitter provides parallel wiring at panel connectors. This

wiring makes it possible to interconnect the signal, power, and control circuits of the receiver-transmitter with asociated components in various combinations required by the different types of systems in which the unit may be used.

a. Three parallel positions are provided at which the basic functions of the receiver-transmitter (talking, listening, and push-to-talk) may be accomplished. These are panel connectors J310, J311, and J312. Thus, the microphone input connection is paralleled between terminals C of the three connectors. The phone connection is paralleled between terminals A of J310 and J311 and terminal E of J312. The speaker connection is paralleled between terminals L of J310 and J311, and terminals A and F of J312. Finally, the control connection (relay ground return) is paralleled between terminals F of J310 and J311, and terminal K of J312. Microphone input, receiver output, and relay control connections can be made at any one, two, or three of these positions. The selection of the particular connector or connectors used is determined by the particular system arrangement and is described in the technical manuals for the different systems.

b. Plate power connection for V115 (par. 41) is provided by external connection of a strap, the normally closed contacts of a relay, or the coil of a relay between terminals H and J of J312. These connections are paralleled in POWER IN connector J309, terminals H and J. In vehicular installations, the connection between H and J on J312 normally is made through the mounting. In portable or emergency arrangements involving the use of dry batteries (Case CY–590/GRC) and a hand generator (Generator G–8/GRC), the strap connection is placed between H and J of J309 by wiring in Power Cable Assembly CX–1210/U, which joins J309 to Case CY–590/GRC and to the hand generator. The cable, battery box, and the hand generator are supplied as part of Modification Kit MX–898/GR.

c. For the connections and operations of a particular radio set, refer to the technical manual for that set.

46. Differences in Receiver-Transmitters RT–66/GRC, RT–67/GRC, and RT–68/GRC

Receiver-Transmitter RT–66/GRC and RT–67/GRC are similar to Receiver-Transmiter RT–68/GRC, described in paragraphs 18 through 45. They differ from that unit primarily in operating frequency range and in those circuit components which determine frequency range. Specific circuit differences are presented at the end of each paragraph. General differences are summarized below.

a. Frequency Range. The operating frequency range of Receiver-Transmitter RT–66/GRC is between 20 and 27.9 mc. There are 80 channels of 100 kc each. Receiver-Transmitter RT–67/GRC is between 27 and 38.9 mc. There are 120 channels of 100 kc each. Receiver-Transmitter RT–68/GRC is between 38.0 and 54.9 mc. There are 170 channels of 100 kc each.

b. Tuning Arrangement. In Receiver-Transmitter RT–66/GRC, the MCS dial-drive mechanism includes eight detent positions. Dial calibration plate shows numbers from 20 to 27. The TR ANT TUNE cam has cam- adjusting screws. In Receiver-Transmitter RT–67/GRC, the MCS dial-drive mechanism includes 12 detent positions. Dial calibration plate numbers range from 27 to 38. The TR ANT TUNE cam has 13 cam-adjusting screws. In Receiver-Transmitter RT–68/GRC the MCS dial-drive mechanism includes 17 detent positions. Dial calibration plate numbers range from 38 to 54. The TR ANT TUNE cam has 17 cam-adjusting screws.

c. Crystal Oscillator V103. There is a different number of crystals for each receiver-transmitter (table I). The gears to the crystal switch are different for each set.

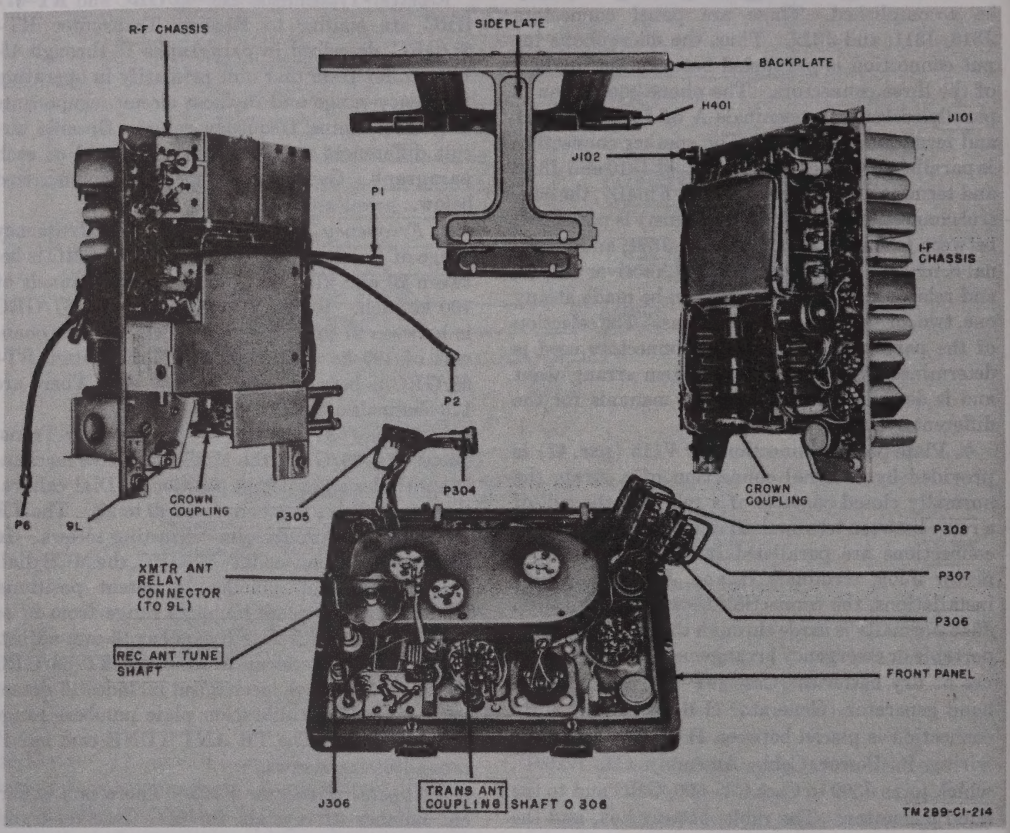

Figure 40. Typical receiver-transmitter, disassembled view.

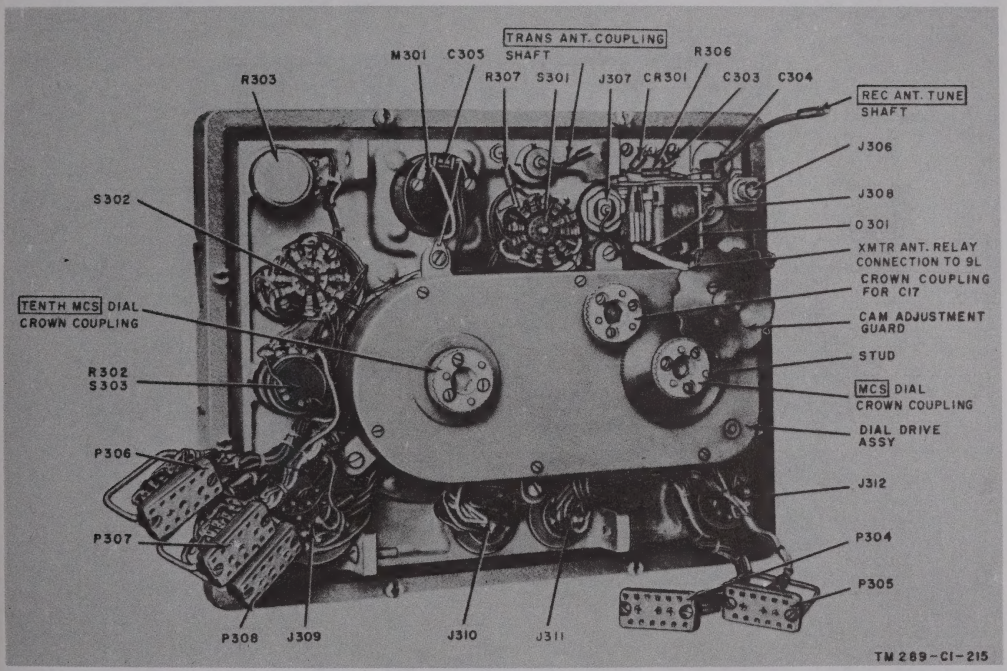

Figure 41. Rear view of panel, for early models.

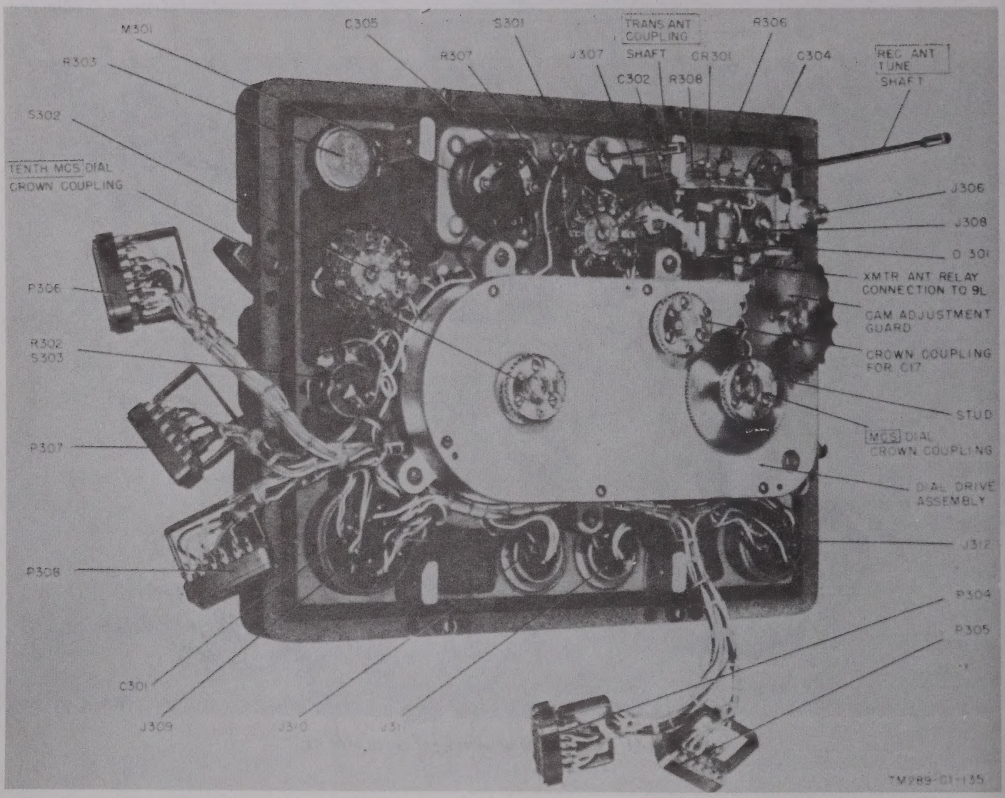

Figure 42. Rear view of panel, for late models.

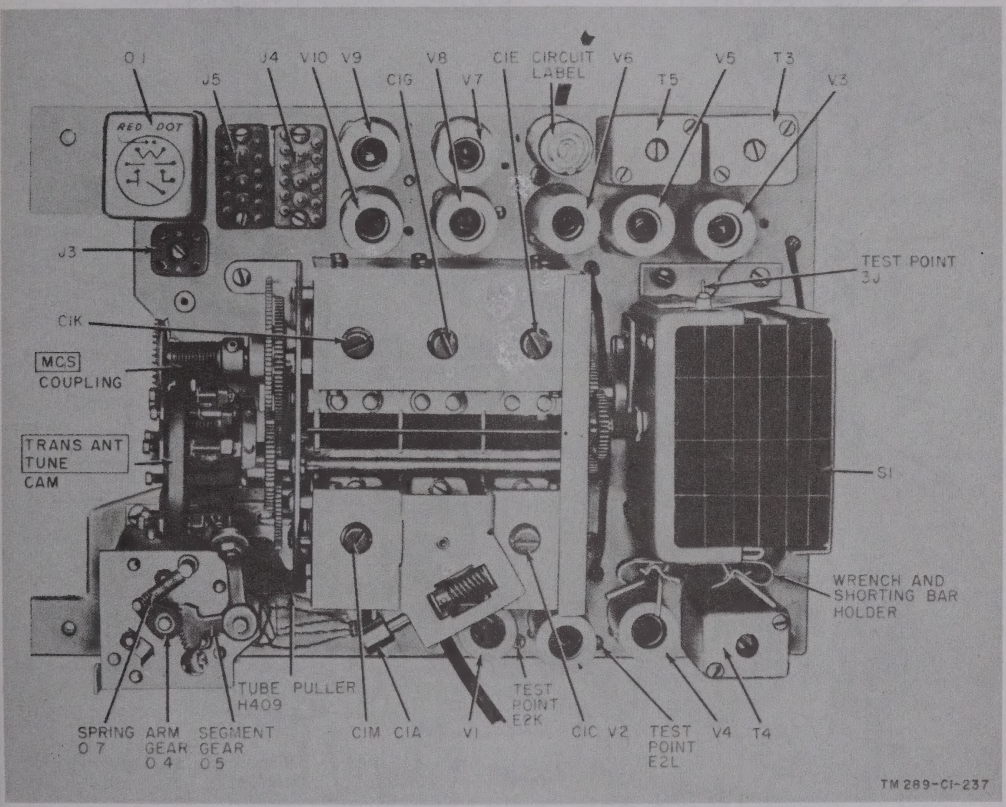

Figure 43. R-f chassis, component side.

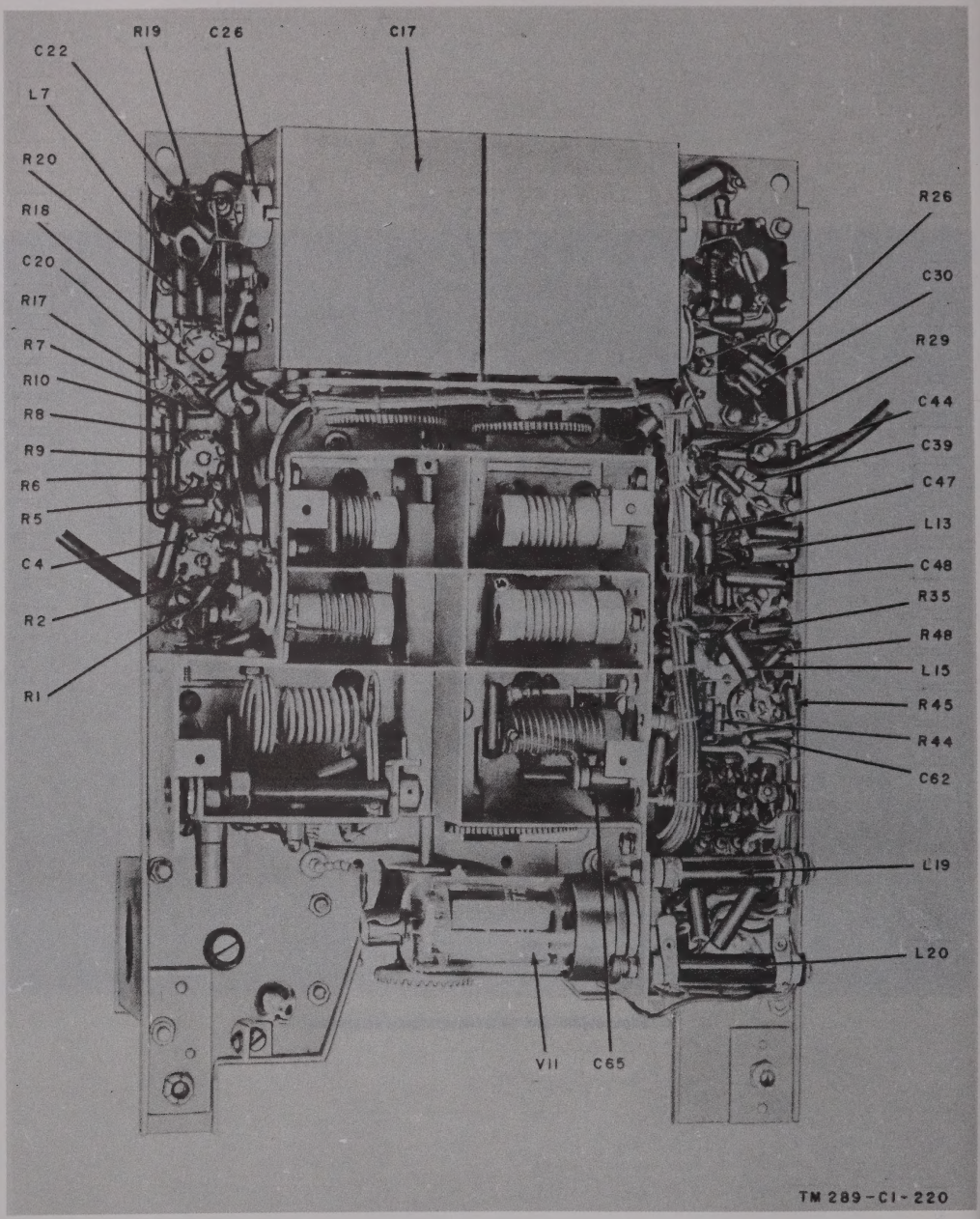

Figure 44. R-f chassis, wiring side, oblique view of top edge, for early models.

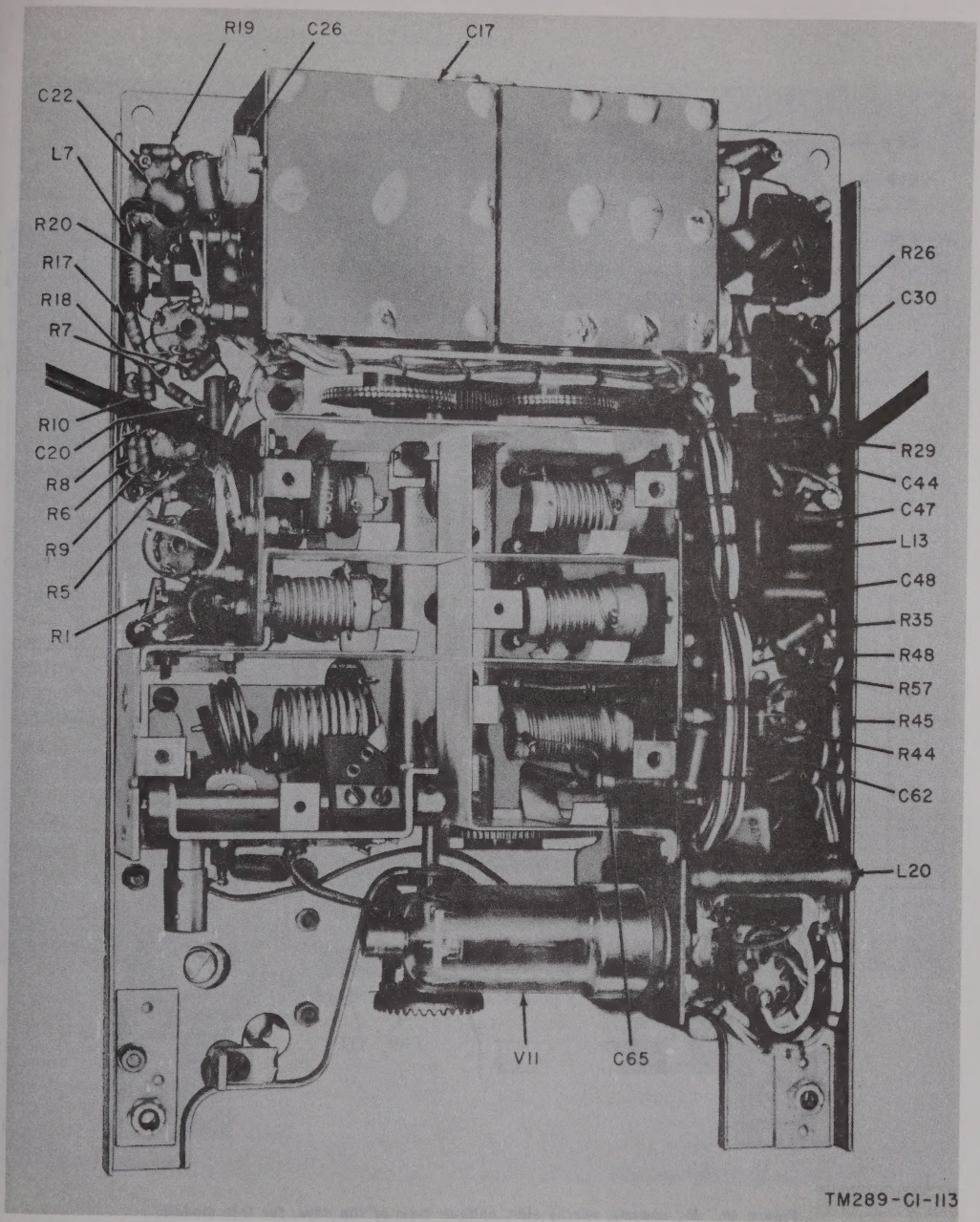

Figure 45. R-f chassis, wiring side, oblique view of top edge, for later models.

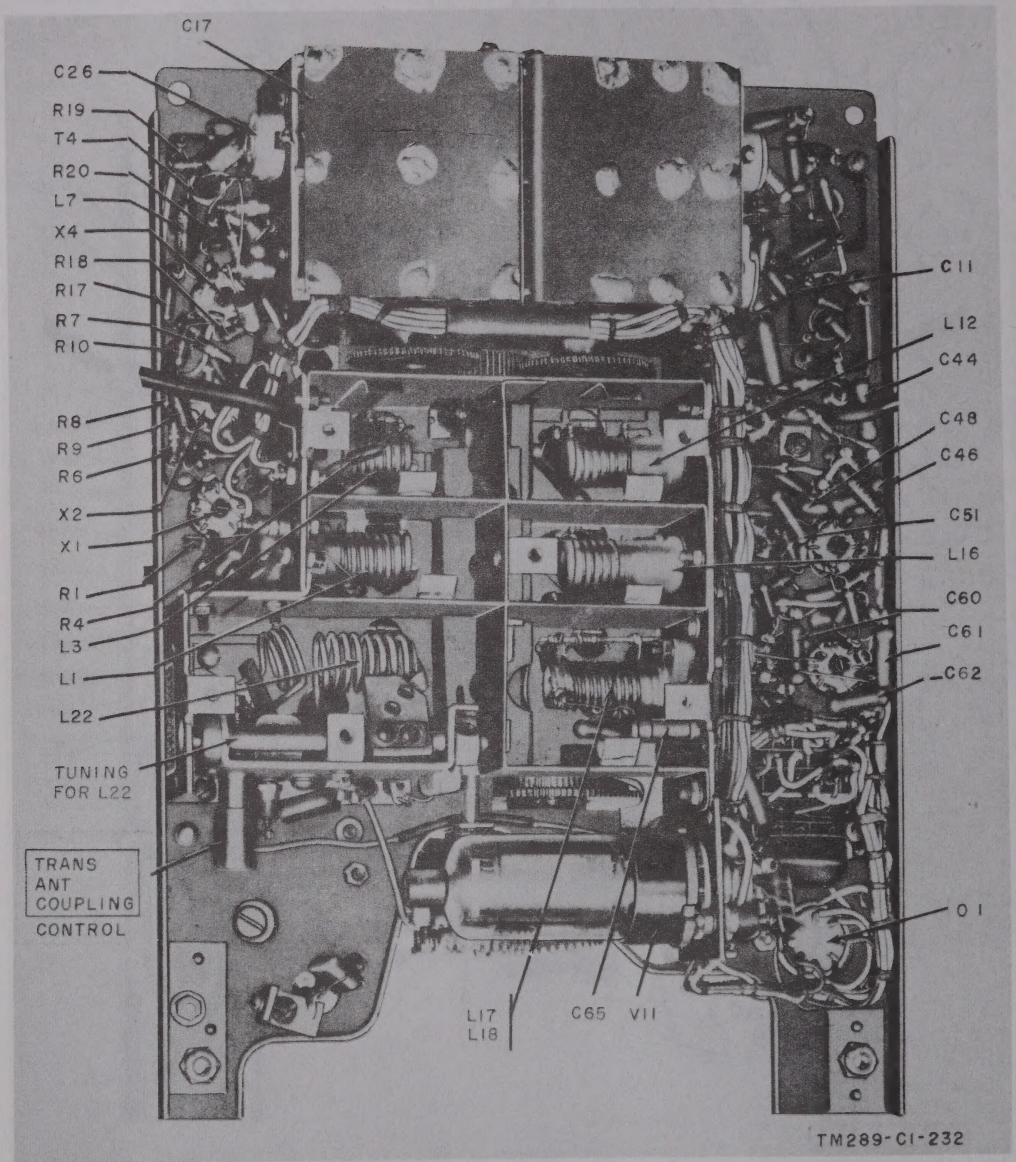

Figure 46. R-f chassis, wiring side, oblique view of top edge, for late models.

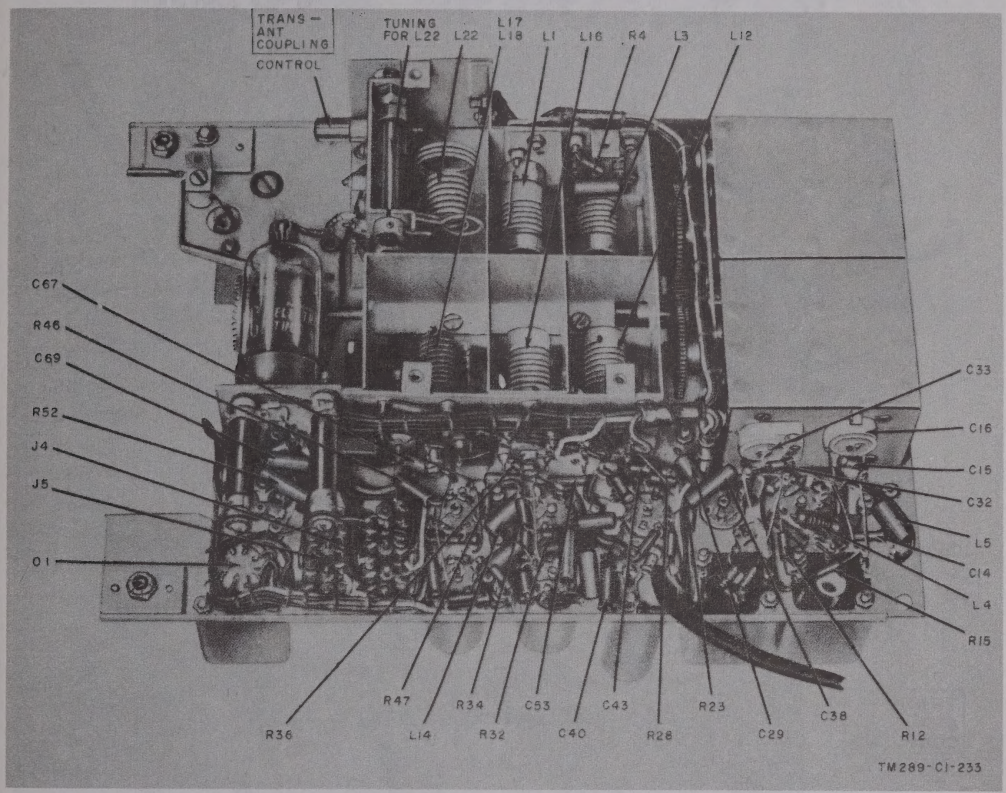

Figure 47. R-f chassis, wiring side, oblique view of bottom edge, for early models.

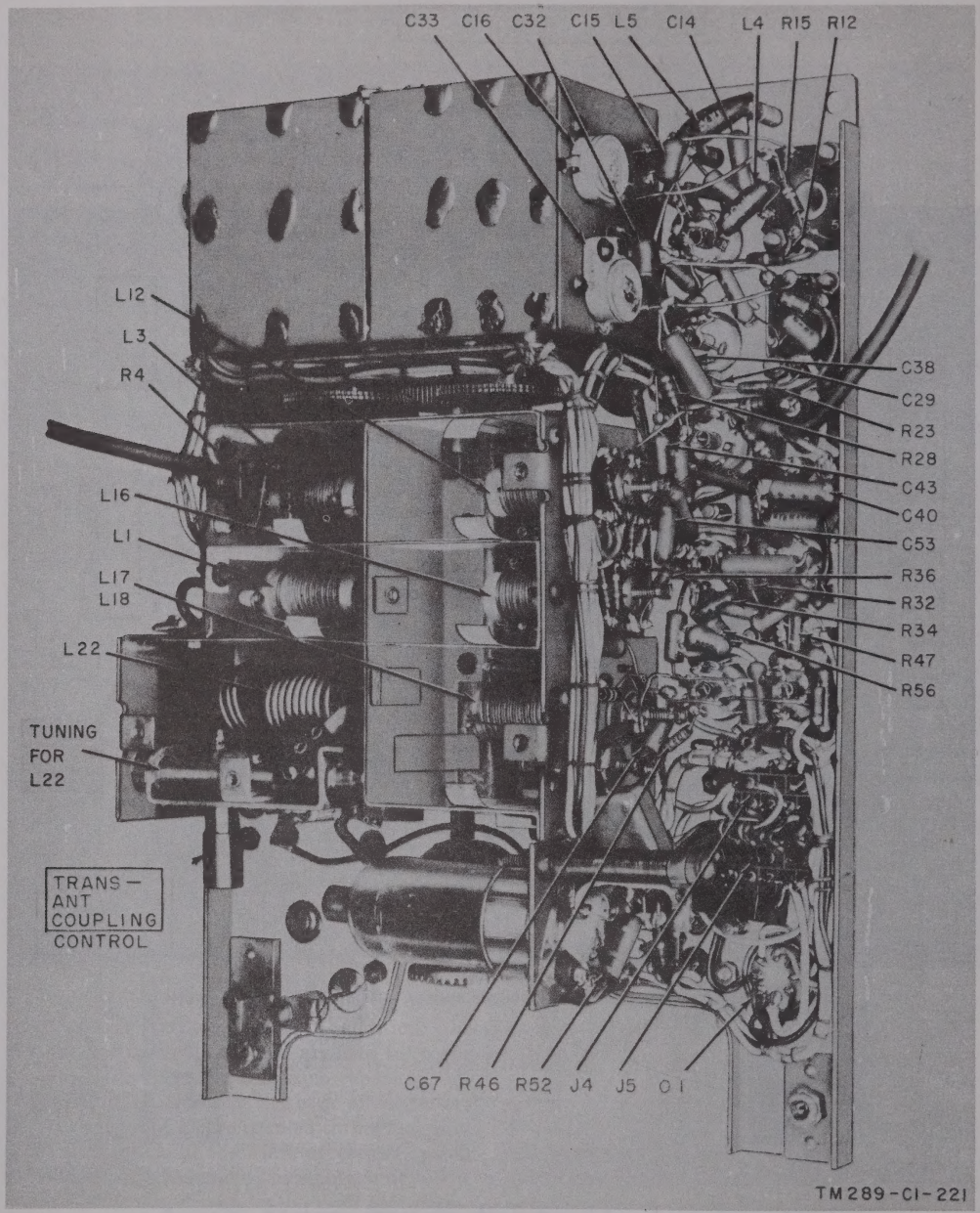

Figure 48. R-f chassis, wiring side, oblique view of bottom edge, for later models

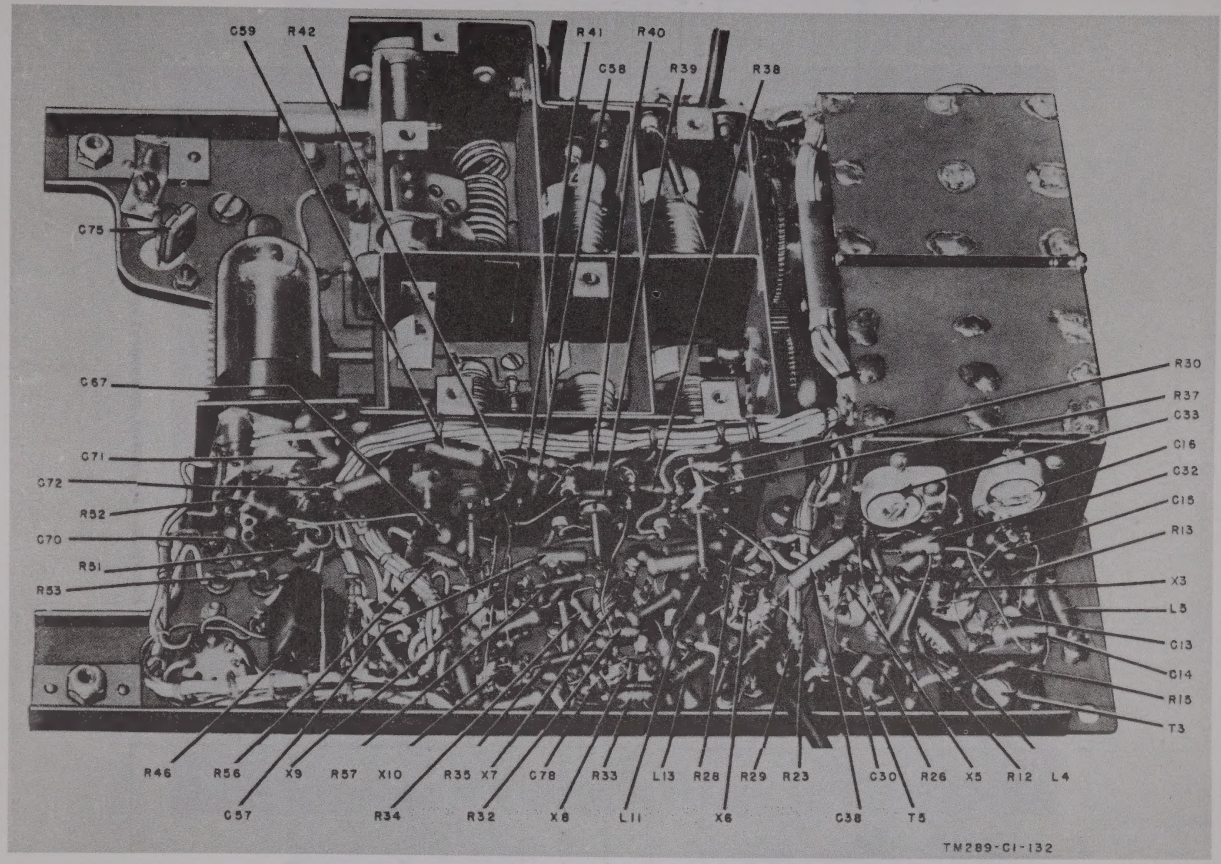

Figure 49. R-f chassis, wiring side, oblique view of bottom edge, for late models.

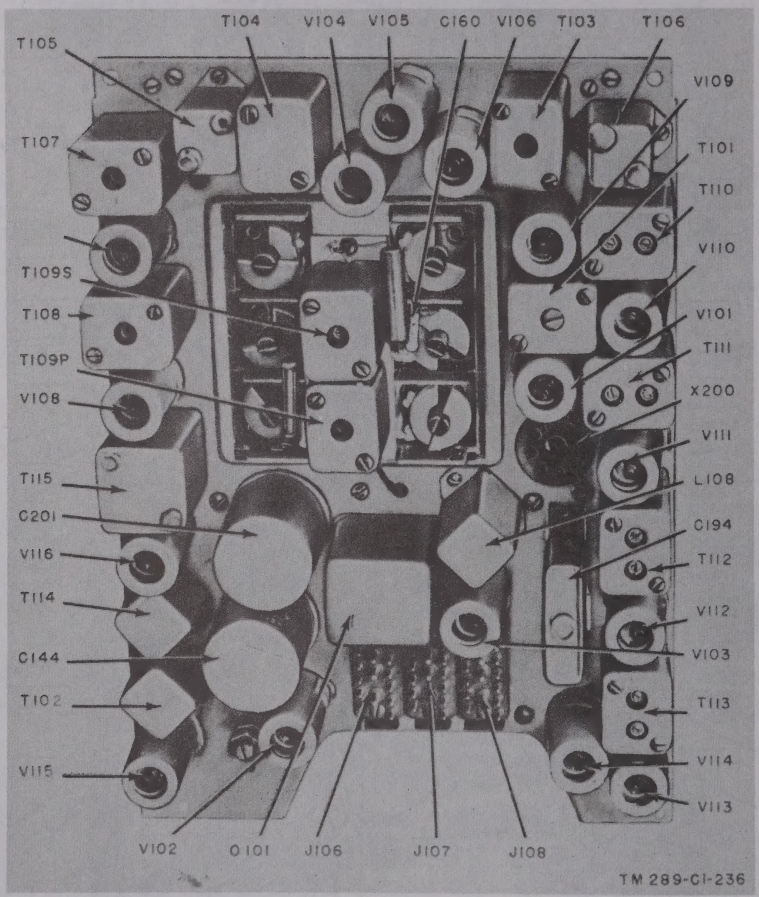

Figure 50. 1-f chassis, component side.

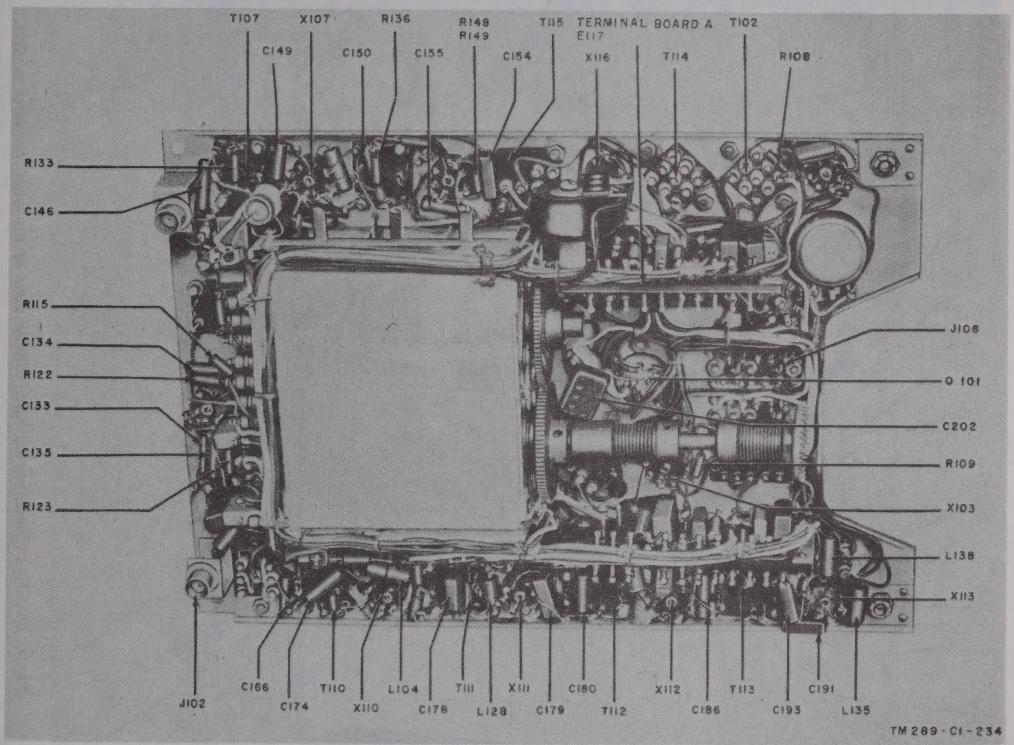

Figure 51. I-f chassis, wiring side, oblique view of top edge, for early models.

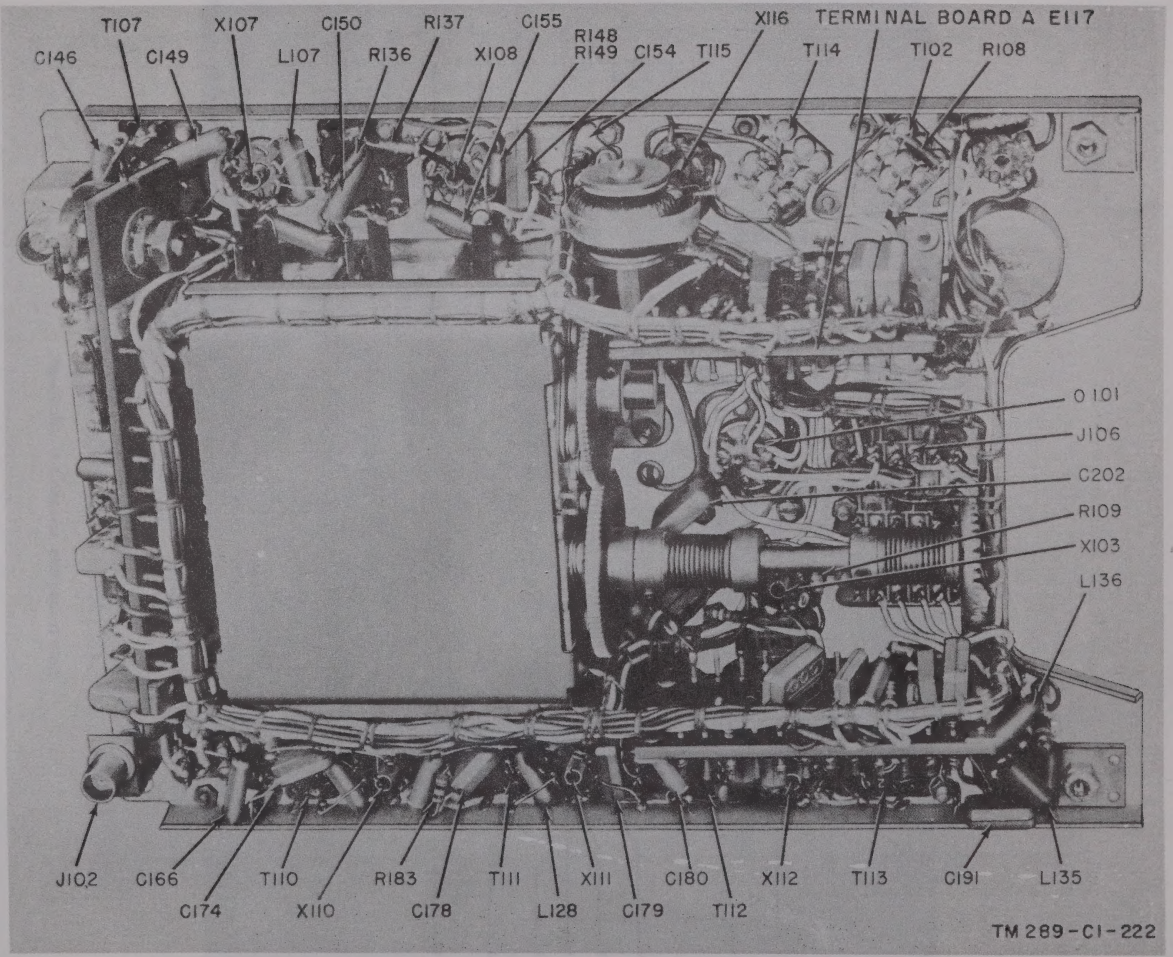

Figure 52. 1-f chassis, wiring side, oblique view of top edge, for later models.

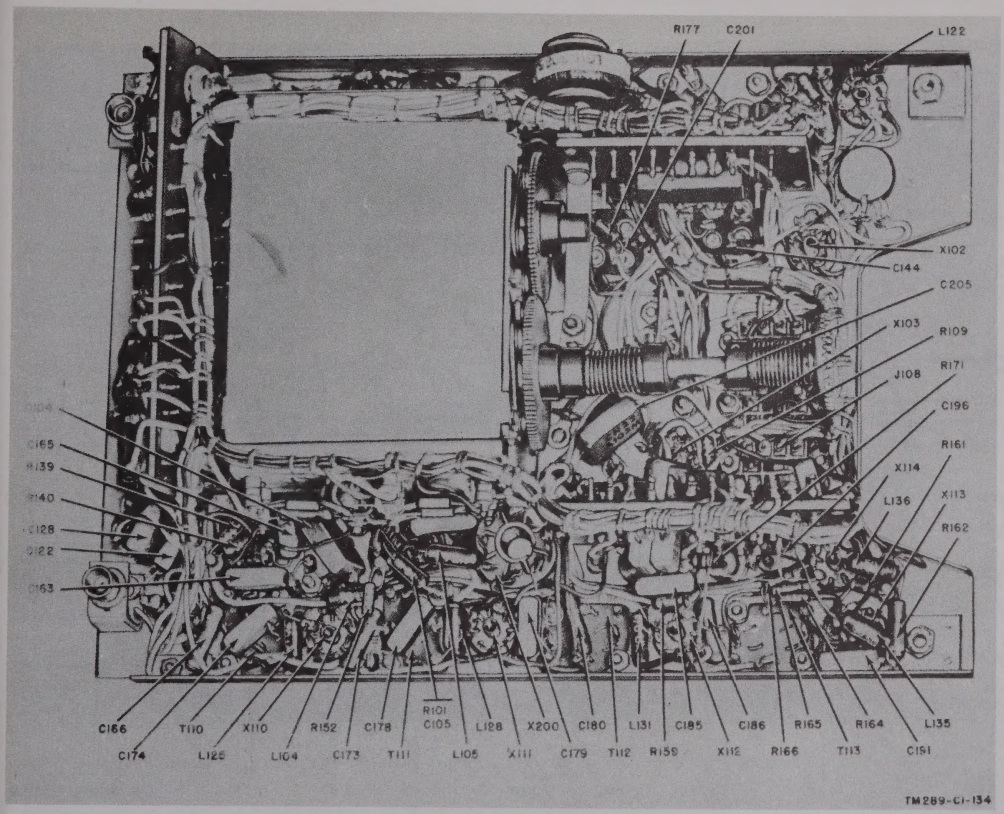

Figure 53. I-f chassis, wiring side, oblique view of top edge, for late models.

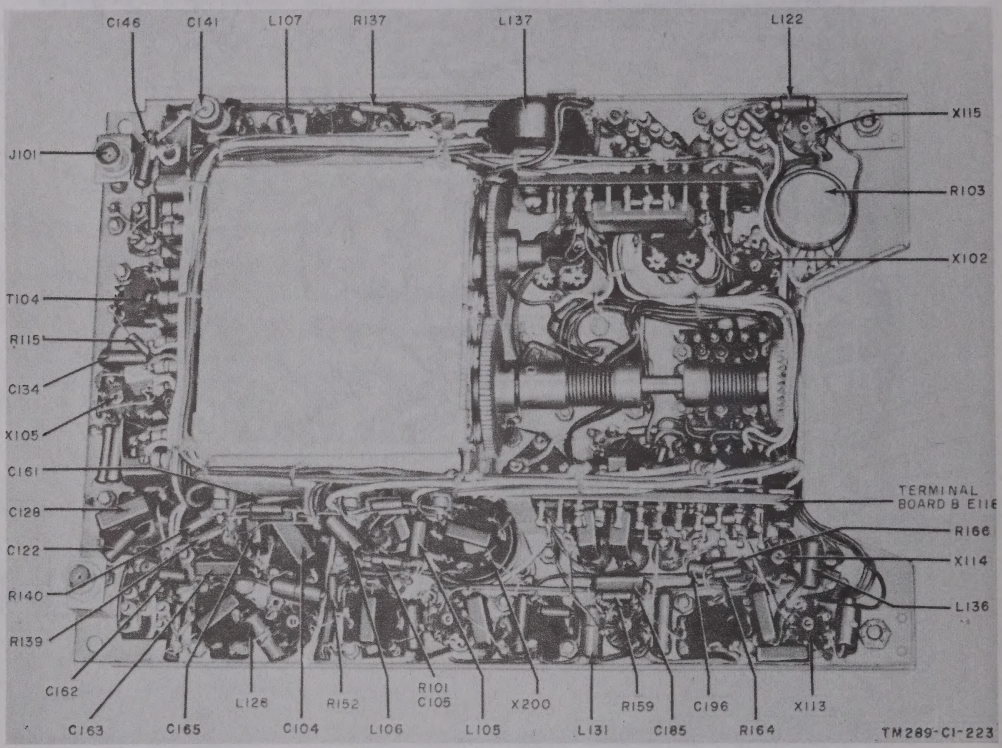

Figure 54. I-f chassis, wiring side, oblique view of bottom edge, for early models.

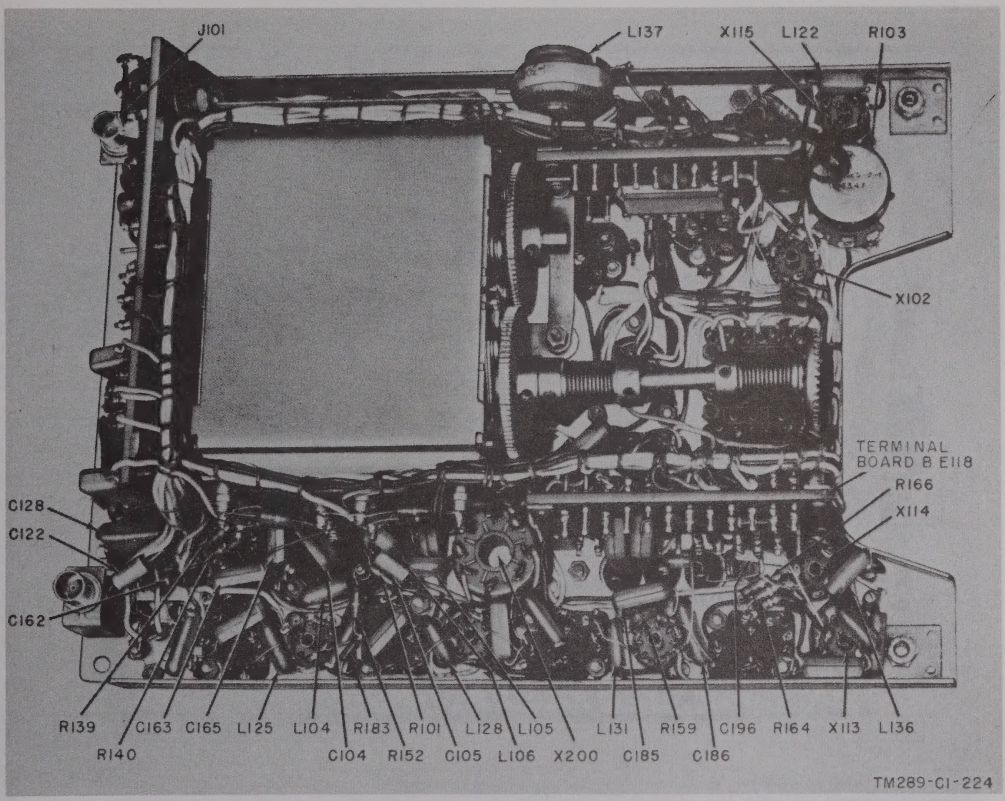

Figure 55. I-f chassis, wiring side, oblique view of bottom edge, for later models.

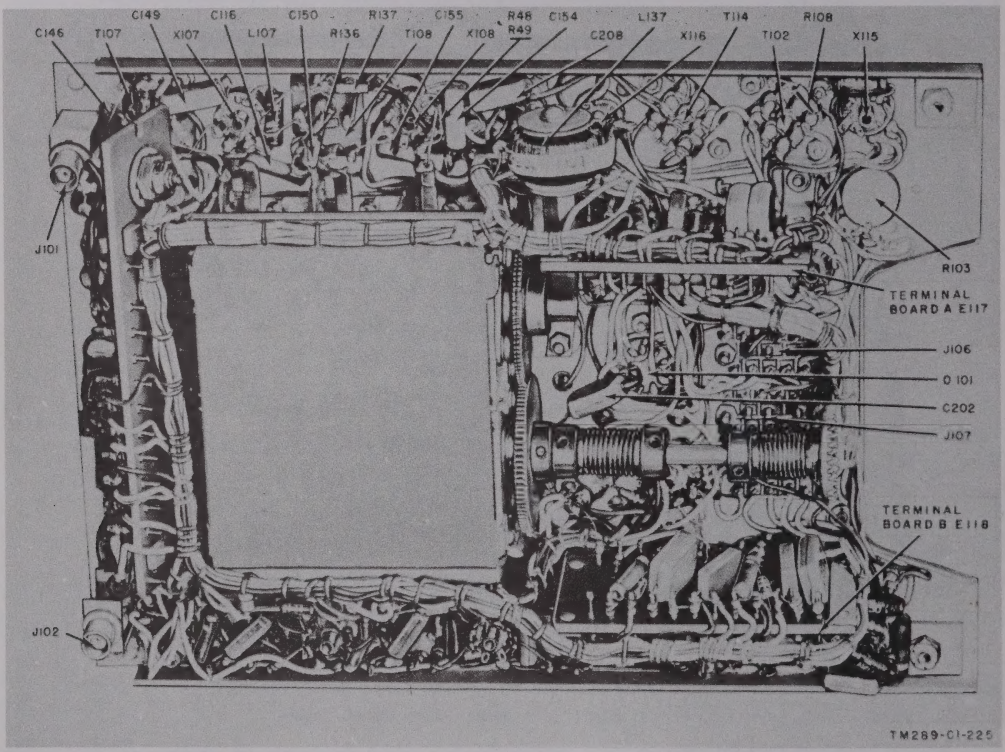

Figure 56. I-f chassis, wiring side, oblique views of bottom edge, for late models.

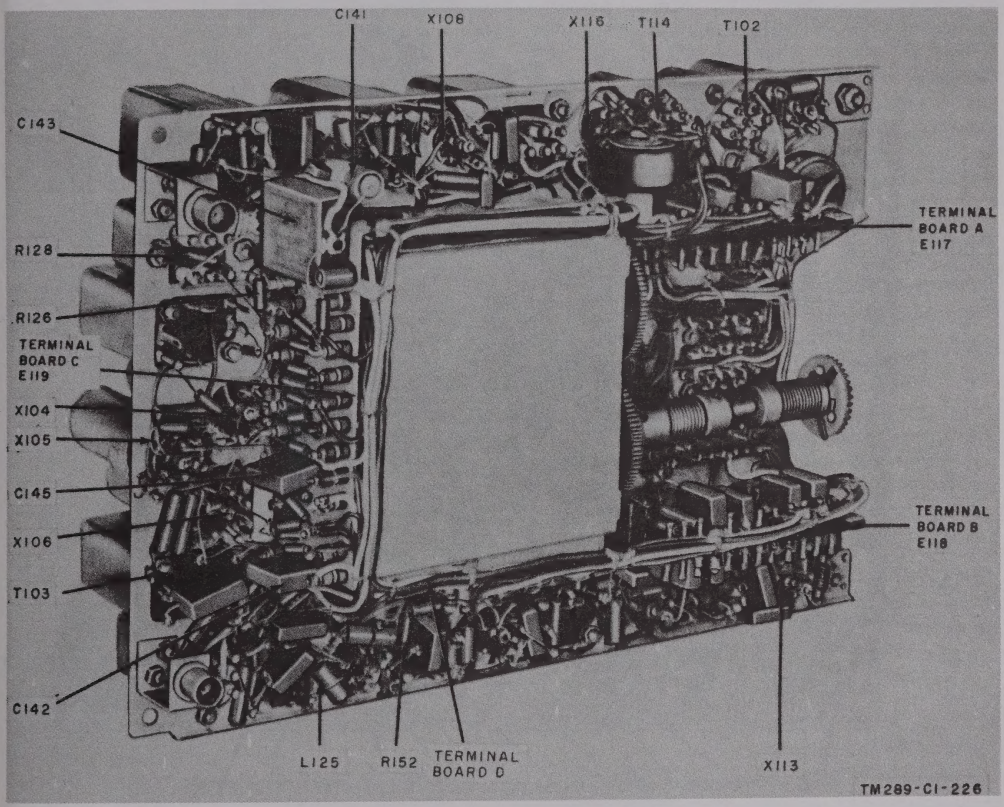

Figure 57. I-f chassis, wiring side, oblique view of rear edge, for early models.

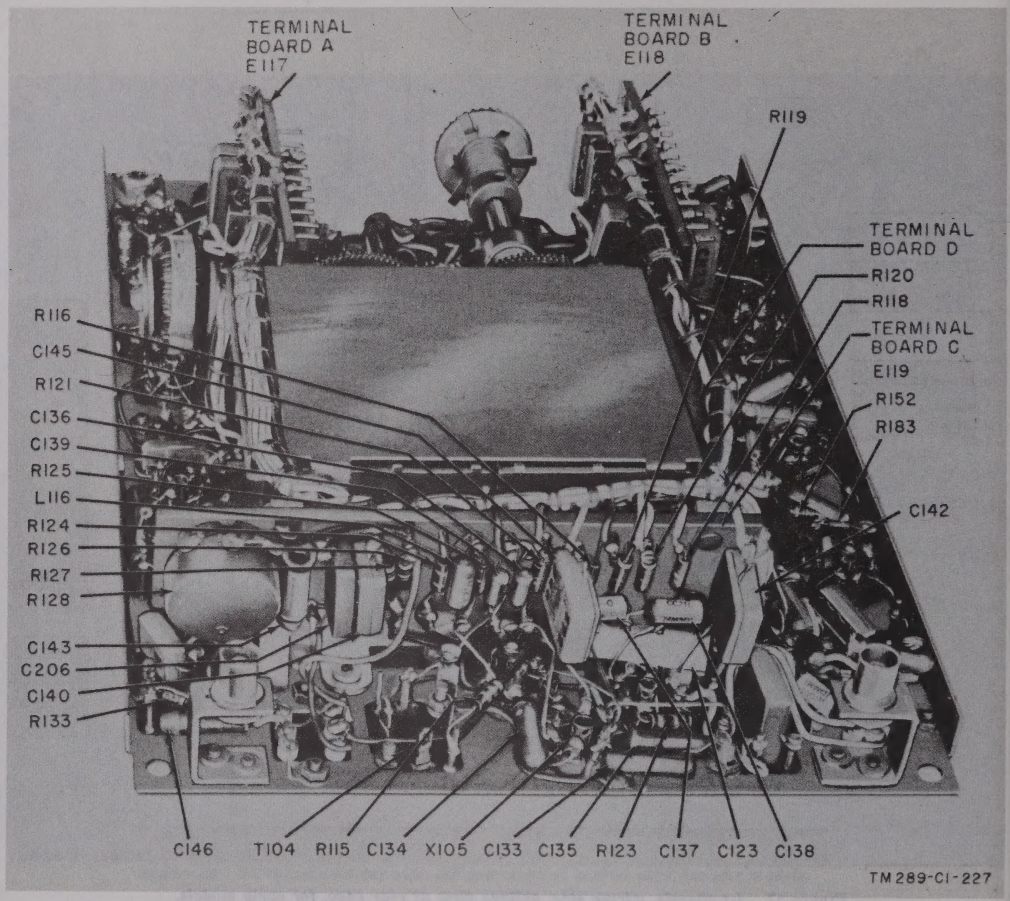

Figure 58. I-f chassis, wiring side, oblique view of rear edge, for later models.

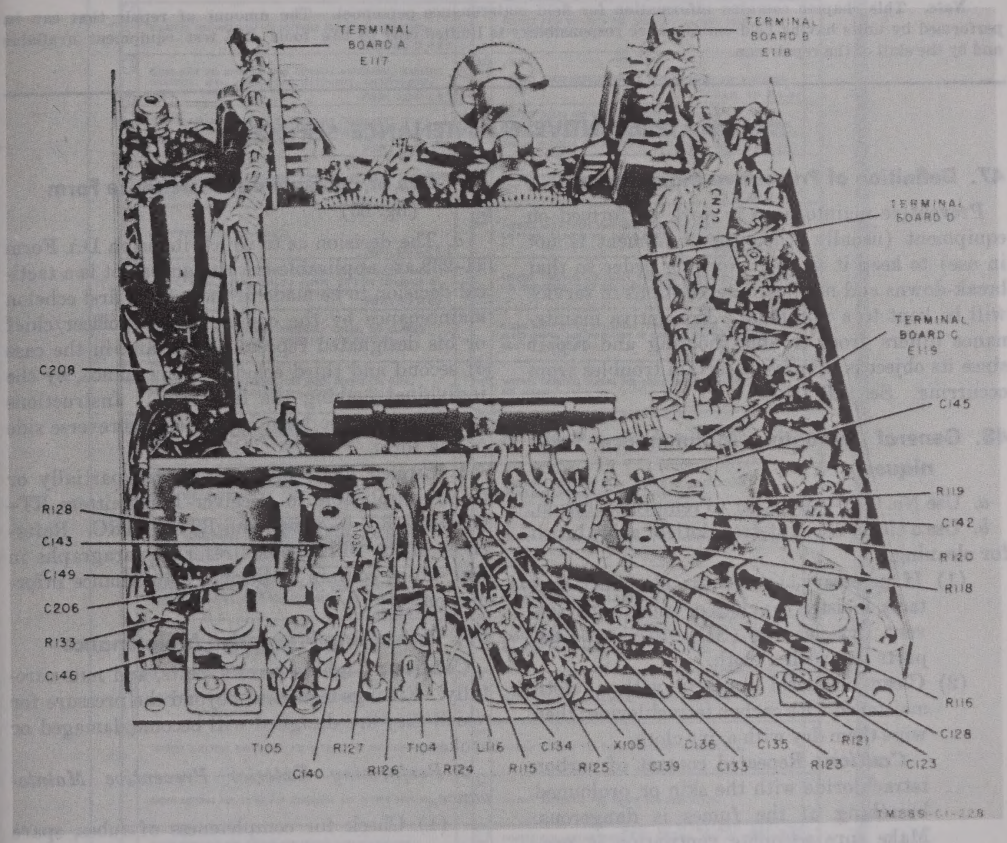

Figure 59. I-f chassis, wiring side, oblique view of rear edge, for late models.

CHAPTER 3

FIELD MAINTENANCE INSTRUCTIONS

Note. This chapter contains information for field maintenance personnel. The amount of repair that can be performed by units having field maintenance responsibility is limited only by the tools and test equipment available and by the skill of the repairman.

Section I. PREVENTIVE MAINTENANCE SERVICES

47. Definition of Preventive Maintenance

Preventive maintenance is work performed on equipment (usually when the equipment is not in use) to keep it in good working order so that break-downs and needless interruptions in service will be kept to a minimum. Preventive maintenance differs from trouble shooting and repair since its object is to prevent certain troubles from occurring. See AR 750–5.

48. General Preventive Maintenance Techniques

a. Use No. 0000 sandpaper to remove corrosion.

b. Use a clean, dry, lint-free cloth or a dry brush for cleaning.

(1) If necessary, except for electrical contacts, moisten the cloth or brush with Solvent, dry-cleaning (SD); then wipe the parts dry with a cloth.

(2) Clean electrical contacts with a cloth moistened with carbon tetrachloride; then wipe them dry with a dry cloth.

Caution: Repeated contact of carbon tetrachloride with the skin or prolonged breathing of the fumes is dangerous. Make sure adequate ventilation is provided. Do not use carbon tetrachloride on polyvinyl insulation; it is a solvent for this resin.

c. If available, dry compressed air may be used at a line pressure not exceeding 60 pounds per square inch to remove dust from inaccessible places; be careful, however, or mechanical damage from the air blast may result.

d. For further information on preventive maintenance techniques, refer to TB SIG 178.

49. Use of Preventive Maintenance Form (fig. 60)

a. The decision as to which items on DA Form 11–239 are applicable to this equipment is a tactical decision to be made in the case of first echelon maintenance by the communication officer/chief or his designated representative, and in the case of second and third echelon maintenance, by the individual making the inspection. Instructions for the use of the form appear on the reverse side of the form.

b. Circled items in figure 60 are partially or totally applicable to Receiver-Transmitters RT–66/GRC, RT–67/GRC, and RT–68/GRC. References in the ITEM block refer to paragraphs in text which contain additional maintenance information.

50. Performing Preventive Maintenance

Caution: Tighten screws, bolts, and nuts carefully. Fittings tightened beyond the pressure for which they are designed will become damaged or broken.

a. Performing Exterior Preventive Maintenance.

(1) Check for completeness of tubes, spare parts (par. 9), miscellaneous accessory equipment (par. 10), and technical manuals.

(2) Check the receiver-transmitter to see that it is properly placed and has not shifted since installation.

(3) Remove dirt and moisture from the front panel.

(4) Check for normal operation. If abnormal results occur at any point during the operating procedure, refer to the oper-

SECOND AND THIRD ECHELON MAINTENANCE CHECK LIST FOR SIGNAL CORPS EQUIPMENT

RADIO COMMUNICATION, DIRECTION FINDING, CARRIER, RADAR

INSTRUCTIONS: See other side

EQUIPMENT NOMENCLATURE: RECEIVER TRANSMITTER RT-68/GRC

EQUIPMENT SERIAL NO.

LEGEND FOR MARKING CONDITIONS: ✓ Satisfactory; X Adjustment, repair or replacement required; ⓒ Defect corrected.
NOTE: Strike out items not applicable.

NO	ITEM	1st Echelon	NO.	ITEM	1st Echelon
1	COMPLETENESS AND GENERAL CONDITION OF EQUIPMENT (*receiver, transmitter, carrying cases, wire and cable, microphones, tubes, spare parts, technical manuals and accessories*). PAR. 50 a (1)		19	ELECTRON TUBES - INSPECT FOR LOOSE ENVELOPES, CAP CONNECTORS, CRACKED SOCKETS; INSUFFICIENT SOCKET SPRING TENSION; CLEAN DUST AND DIRT CAREFULLY) CHECK EMISSION OF RECEIVER TYPE TUBES. PAR. 50 b (1)	
2	LOCATION AND INSTALLATION SUITABLE FOR NORMAL OPERATION. PAR. 50 a (2)		20	INSPECT FILM CUT-OUTS FOR LOOSE PARTS, DIRT, MISALIGNMENT AND CORROSION.	
3	CLEAN DIRT AND MOISTURE FROM ANTENNA, MICROPHONE, HEADSETS, CHESTSETS, KEYS, JACKS, PLUGS, TELEPHONES, CARRYING BAGS, COMPONENT PANELS. PAR. 50 a (3)		21	INSPECT FIXED CAPACITORS FOR LEAKS, BULGES, AND DISCOLORATION. PAR. 50 b (4)	
4	INSPECT SEATING OF READILY ACCESSIBLE "PLUCK-OUT" ITEMS: TUBES, LAMPS, CRYSTALS, FUSES, CONNECTORS, VIBRATORS, PLUG-IN COILS AND RESISTORS. PAR. 50 b (1)		22	INSPECT RELAY AND CIRCUIT BREAKER ASSEMBLIES FOR LOOSE MOUNTINGS; BURNED, PITTED, CORRODED CONTACTS; MISALIGNMENT OF CONTACTS AND SPRINGS; INSUFFICIENT SPRING TENSION; BINDING OF PLUNGERS AND HINGE PARTS. PAR. 50 b (2)	
5	INSPECT CONTROLS FOR BINDING, SCRAPING, EXCESSIVE LOOSENESS, WORN OR CHIPPED GEARS, MISALIGNMENT, POSITIVE ACTION.		23	INSPECT VARIABLE CAPACITORS FOR DIRT, MOISTURE, MISALIGNMENT OF PLATES, AND LOOSE MOUNTINGS. PAR. 50 b (5)	
6	CHECK FOR NORMAL OPERATION. PAR. 50 a (4)		24	INSPECT RESISTORS, BUSHINGS, AND INSULATORS, FOR CRACKS, CHIPPING, BLISTERING, DISCOLORATION AND MOISTURE. PAR. 50 b (3)	
7	CLEAN AND TIGHTEN EXTERIOR OF COMPONENTS AND CASES, RACK MOUNTS, SHOCK MOUNTS, ANTENNA MOUNTS, COAXIAL TRANSMISSION LINES, WAVE GUIDES, AND CABLE CONNECTIONS. PAR. 50 a (5)		25	INSPECT TERMINALS OF LARGE FIXED CAPACITORS AND RESISTORS FOR CORROSION, DIRT AND LOOSE CONTACTS.	
8	INSPECT CASES, MOUNTINGS, ANTENNAS, TOWERS, AND EXPOSED METAL SURFACES, FOR RUST, CORROSION, AND MOISTURE.		26	CLEAN AND TIGHTEN SWITCHES, TERMINAL BLOCKS, BLOWERS, RELAY CASES, AND INTERIORS OF CHASSIS AND CABINETS NOT READILY ACCESSIBLE.	
9	INSPECT CORD, CABLE, WIRE, AND SHOCK MOUNTS FOR CUTS, BREAKS, FRAYING, DETERIORATION, KINKS, AND STRAIN. PAR. 50 a (6)		27	INSPECT TERMINAL BLOCKS FOR LOOSE CONNECTIONS, CRACKS AND BREAKS. PAR. 50 b (6)	
10	INSPECT ANTENNA FOR ECCENTRICITIES, CORROSION, LOOSE FIT, DAMAGED INSULATORS AND REFLECTORS.		28	CHECK SETTINGS OF ADJUSTABLE RELAYS.	
11	INSPECT CANVAS ITEMS, LEATHER, AND CABLING FOR MILDEW, TEARS, AND FRAYING.		29	LUBRICATE EQUIPMENT IN ACCORDANCE WITH APPLICABLE DEPARTMENT OF THE ARMY LUBRICATION ORDER.	
12	INSPECT FOR LOOSENESS OF ACCESSIBLE ITEMS: SWITCHES, KNOBS, JACKS, CONNECTORS, ELECTRICAL TRANSFORMERS, POWERSTATS, RELAYS, SELSYNS, MOTORS, BLOWERS, CAPACITORS, GENERATORS, AND PILOT LIGHT ASSEMBLIES.		30	INSPECT GENERATORS, AMPLIDYNES, DYNAMOTORS, FOR BRUSH WEAR, SPRING TENSION, ARCING, AND FITTING OF COMMUTATOR.	
13	INSPECT STORAGE BATTERIES FOR DIRT, LOOSE TERMINALS, ELECTROLYTE LEVEL AND SPECIFIC GRAVITY, AND DAMAGED CASES. PAR. 50 a (7)		31	CLEAN AND TIGHTEN CONNECTIONS AND MOUNTINGS FOR TRANSFORMERS CHOKES, POTENTIOMETERS, AND RHEOSTATS.	
14	CLEAN AIR FILTERS, BRASS NAME PLATES, DIAL AND METER WINDOWS, JEWEL ASSEMBLIES.		32	INSPECT TRANSFORMERS, CHOKES, POTENTIOMETERS, AND RHEOSTATS FOR OVERHEATING AND OIL-LEAKAGE.	
15	INSPECT METERS FOR DAMAGED GLASS AND CASES. PAR. 50 a (8)		33	BEFORE SHIPPING OR STORING - REMOVE BATTERIES.	
16	INSPECT SHELTERS AND COVERS FOR ADEQUACY OF WEATHERPROOFING.		34	INSPECT CATHODE RAY TUBES FOR BURNT SCREEN SPOTS.	
17	CHECK ANTENNA GUY WIRES FOR LOOSENESS AND PROPER TENSION.		35	INSPECT BATTERIES FOR SHORTS AND DEAD CELLS.	
18	CHECK TERMINAL BOX COVERS FOR CRACKS, LEAKS, DAMAGED GASKETS, DIRT AND GREASE.		36	PAR. 50 a (9) AND b (7), (8) INSPECT FOR LEAKING WATERPROOF GASKETS, WORN OR LOOSE PARTS.	
			37	MOISTURE AND FUNGIPROOF. PAR. 50 b (9)	
38	IF DEFICIENCIES NOTED ARE NOT CORRECTED DURING INSPECTION, INDICATE ACTION TAKEN FOR CORRECTION. PAR. 50 a (10) AND b (10)				

DA AGO FORM 1 MAY 51 11-239 REPLACES DA AGO FORM 419, 1 DEC 50, WHICH IS OBSOLETE. 16-64383-1

TM 289-CI-277

Figure 60. DA Form 11-239.

ational chart (par. 56), and to the system technical manual or instruction book.

(5) Clean the exterior of the case. Check the cable connections, and tighten dzus fasteners that secure the panel to the case.

(6) Inspect the power cable for cuts, breaks, fraying, deterioration, kinks, and strain.

(7) Inspect all front panel controls for binding, scraping, and excessive looseness (fig. 8).

(8) Inspect the front panel meter for damaged glass and case (fig. 8).

(9) Inspect the gasket between the front panel and case for damage and deterioration.

(10) If the deficiencies noted are not corrected during inspection, indicate on DA Form 11–239 the action taken to initiate correction.

b. Performing Interior Preventive Maintenance.

Caution: Disconnect all power before performing the following operations. When the checks are completed, reconnect the power and check for satisfactory operation.

(1) Inspect the electron tubes for loose envelopes, cracked sockets, and firm seating. Check for a loose cap connection on power amplifier V11 (fig. 44). Check the emission of tubes. Check the seating of the crystals in the crystal switch assembly (fig. 5).

(2) Check for loose mounting of relays O1, O101, and O301 (figs. 41, 43, and 50). Inspect relay O301 for burned or corroded contacts, for misalinement of contacts, and for binding of armature.

(3) Inspect the resistors and insulators for cracks, blistering, discoloration, and moisture.

(4) Inspect the fixed capacitors for leaks, bulges, and discoloration.

(5) Inspect variable capacitors C1, C74, and C101 for dirt, moisture, misalinement of plates, and loose mountings (figs. 4, 5, and 6).

(6) Inspect terminal boards A, B, C, and D for loose connections, cracks, and breaks (fig. 57). Check the seating and condition of interchassis connectors P306, P307, and P308 (fig. 6).

(7) Check the gears for damaged teeth. Check the crown couplings for damage and correct positioning of locking device (fig. 11).

(8) Inspect for worn or loose parts.

(9) Check for adequacy of moistureproofing and fungiproofing (par. 71).

(10) If the deficiencies noted are not corrected during inspection, indicate on DA Form 11–239 the action taken to initiate correction.

Section II. TROUBLESHOOTING AT FIELD MAINTENANCE LEVEL

51. Troubleshooting Procedures

The test procedures for sectionalizing and localizing trouble in Receiver-Transmitters RT–66/GRC, RT–67/GRC, and RT–68/GRC are outlined in the following steps:

a. Short-Circuit Checks. These checks consist of resistance measurements. They are intended to locate any short circuits that might damage the power supply or cause additional damage to the equipment when power is applied (par. 53). Repair all short circuits before applying power to the unit.

b. Operational Checks. Operational checks (par. 56) are made to determine whether or not the receiver-transmitter performs its various functions properly. The trouble symptoms obtained will point to a faulty condition within the transmitter or within the receiver and, in some cases, may sectionalize the trouble to a smaller circuit group. Sometimes a specific part or wire may be indicated as causing trouble. Operational checks should be made in the order given, and each trouble should be cleared as it is found, before proceeding with the next operational check. Accordingly, every time a faulty condition is encountered, the additional checks recommended in the chart should be made. Detailed instructions for using the operational check chart are given in paragraph 55.

c. Additional Trouble Sectionalization Checks. A group of four trouble sectionalization charts (pars. 57 through 60) supplement the operational checks. These are the receiver, transmitter, tracking, and filament circuit check charts. When

trouble is encountered as a result of an operational check, refer to the indicated chart and perform the required additional checks. These checks will narrow the trouble possibilities down to a related group of stages and, in some cases, to an individual stage or part. A brief description of the charts follows.

(1) *Receiver trouble sectionalization chart* (par. 57). After trouble has been traced by operational checks to the receiver circuit, the tests indicated in the receiver trouble sectionalization chart will reduce the trouble to a circuit group, that is, audio circuit, variable i. f., fixed i. f., etc.

(2) *Transmitter trouble sectionalization chart* (par. 58). In a similar manner, this chart gives a series of checks for functionally grouped transmitter circuits. The internal checks indicated there will make it possible to limit the trouble to a particular transmitter stage.

(3) *Receiver-transmitter tracking check chart* (par. 59). This chart supplements the receiver and transmitter trouble sectionalization charts. It expands certain tests shown there to make it possible to localize tracking and difficulties caused by mistuning to more or less specific causes.

(4) *Filament circuit check chart* (par. 60). The filament circuits of all tubes, except tubes V1 and V11, can be checked by means of the panel-mounted meter and METER switch S301. Proper interpretation of the readings obtained by means of that switch and the meter will limit the fault to a particular tube or circuit element in the filament circuit. The filament circuit check chart facilitates making such an analysis.

d. Signal Substitution. Once the trouble within the receiver-transmitter has been sectionalized to a particular circuit, a signal substitution or signal tracing procedure (par. 61) is used to localize the trouble to a particular stage within the group of stages. A stage gain chart (par. 61*e*) is given to assist in making the signal substitution tests.

e. Resistance Measurements. These tests are made to locate faults or defective components and wiring within the circuit or stage shown to be defective by the signal tracing procedure (par. 62).

f. Voltage Measurements. Voltage measurements (par. 63) are made to determine whether the correct d-c voltages are present at significant points of the circuit. They are made for the purpose of disclosing faults not observable during the preceding tests.

g. Additional Checks. Continuity checks (par. 64) are made to determine the faults in wiring and circuit sections that cannot be discovered by any of the means outlined above.

52. Test Equipment and Tools Required for Trouble Shooting

The following test equipment and tools are required for making the troubleshooting tests described in this section. Arbitrary references are assigned to the signal generators and meters listed below to facilitate identification with instruments called for in troubleshooting procedures.

a. Either of the following power supply combinations:
  (1) A 12-volt storage battery and Power Supply PP–109/GR.
  (2) A 24-volt storage battery and Power Supply PP–112/GR.

b. Audio devices as follows:
  (1) Handset H–33/PT.
  (2) Microphone T–17 with cord and plug, and Headset HS–30.

c. Loudspeaker LS–166 with cord and suitable connector.

d. Test instruments, as follows:
  (1) Electronic Multimeter TS–505/U (d-c voltohmmeter) (M1).
  (2) Multimeter TS–297/U or Multimeter TS–352/U (M2).
  (3) Electronic Multimeter ME–6A/U (a-c voltmeter) (M3).

  Note. When using the above meter, connect a 1,000 $\mu\mu$f (micromicrofarad) stabilizing capacitor across its meter movement.

  (4) 0 to 100-microampere meter (Sig C stock No. 3F871–19 or equivalent) (M7).
  (5) Output Meter TS–585A/U (M4).
  (6) Electron Tube Test Set TV–2/U or Electron Tube Test TV–7/U.
  (7) Signal Generator AN/URM–48 (Signal Generator SG–12/U) (G1).
  (8) FR Signal Generator Set AN/URM–25 (G2).
  (9) Audio Oscillator TS–382/U or TS–382A/U (G3).
  (10) Spectrum Analyzer TS–723/U.

(11) Frequency Meter FR–67/U.
(12) Test Facilities Kit MK–153/GRC.
(13) Frequency Meter TS–174/U (M5).
(14) Frequency Meter Set SCR–211 (M6).

e. Electrical components as follows:
(1) Shunting unit, consisting of a .006-μf (microfarad) capacitor in series with a 2,700-ohm ½-watt resistor with test clips at each end of the series combination (contained in Test Equipment IE–9–C).
(2) Capacitor: mica dielectric; .006 μf (contained in Test Equipment IE–9–C).
(3) Alligator type test clips (2 required).

f. Antenna components, as follows:
(1) Dummy antenna, consisting of a 40-ohm, 100-watt, noninductive type resistor assembly, in series with an r-f ammeter such as Weston model No. 425 or equal (fig. 62).
(2) Antenna base and mast sections of type to be used with the receiver-transmitter (par. 8*a*(4)).

g. Cables and connectors, as follows:
(1) Four-inch lead with alligator clips on each end (2 required).
(2) Battery clips.
(3) Connector, plug to mate with J1 on Power Supply PP–109/GR or PP–112/GR.
(4) Connector, plug to mate with J106 (3 required).
(5) Connector, receptacle to mate with P306 (3 required) and wire Signal Corps stock No. 5F1B1320.1 (135 feet required).
(6) Connector, receptacle to mate with J309 (3 required), and wire Signal Corps stock No. 1B1316.1 (10 feet) and No. 1131320.9 (30 feet) or Power Cable Assembly CX–1210/U shorting together pins B and M on J309 POWER IN connector on the receiver-transmitter.

h. Tools, as follows:
(1) Tool Equipments TE–113 and TE–114.
(2) Tool Equipment TE–41.
(3) Allen wrenches.
(4) Tube puller.
(5) MFP Kit MK–2/GSM.

53. Checking Key Circuits for Shorts

a. The purpose of the checks outlined in this paragraph is to make sure that when power finally is connected to the receiver-transmitter the equipment will not be damaged because of short circuits. Also, many types of trouble, such as shorted capacitors, faulty relay contacts, etc., may be discovered by means of these tests. Use Electronic Multimeter TS–505/U (M1), or an equivalent meter, to check the resistance between each of the points on connectors J309 through J312 and chassis. The points of measurement and the required readings are summarized in the following chart. For these measurements, power should be disconnected from the equipment.

Short-circuit checks

	J309	J310 or J311	J312
A	Infinity	24	24.
B	110,000*	0	24.
C	Infinity	15	15.
D	0	Infinity	0.
E	0	0	24.
F	Infinity	Infinity	24.
H	Infinity	0	Infinity.
J	Infinity	Infinity	Infinity.
K	Infinity	Infinity	Infinity.
L	5	24	
M	Infinity		
N	Infinity		
P	Infinity		
R	5,000		

*After capacitor charge indication.

b. If a required reading is not obtained, refer to the schematic diagram for the particular unit (figs. 79 through 82) to determine which part or parts may be responsible for the trouble. Incorrect readings may be caused by shorted or leaky bypass capacitors, defective relay contacts, resistors, or a wire or lug on one of the parts shorted to the chassis. Check each capacitor in the affected circuit section for leakage or short, and replace if necessary. Check the wires, lugs on components, and contacts of switches. Repair as necessary. Do not apply power until the trouble is cleared and all the readings indicated in the table are obtained.

Note. The resistance reading between terminal B of J309 and chassis should show a capacitor charge and should reach about 110,000 ohms, since SQUELCH control potentiometer R302, resistor R177 and filter capacitors of the 85-volt circuit are arranged in series-parallel connections across these two points. A shorted or leaky filter capacitor anywhere on the 85-volt supply lead may bring this reading down to some considerably lower finite value or to zero. The finite resistance reading obtained then will depend on the extent of the leakage and value of the associated filter resistor. For example, a completely shorted capacitor C201B will cause a reading of 100 ohms or less to be obtained, since that is the value of the associated resistor, R177, shunting the 85-volt circuit to ground.

54. Test Bench Setup for Operational Check Using Power Supply PP–109/GR or PP–112/GR

(fig. 61)

If the receiver-transmitter is to be tested apart from the components with which it is normally associated in an operating installation, it is necessary to connect to it an antenna load, a source of operating power, and audio sending and receiving devices.

a. Antenna Load. If a dummy antenna load is to be used, proceed as follows:

(1) Connect a 40-ohm, 100-watt, noninductive type resistor in series with an r-f output meter (par. 52*f*). Connect the series arrangement of the two to one end of a short piece of coaxial cable. Fit the other end of the cable with a coaxial connector plug (male) to mate with coaxial ANT connector J307 on the front panel.

(2) If a 40-ohm, 100-watt, noninductive type resistor is not available, an alternate type of dummy load (figs. 62 and 63) can be constructed.

(3) Connect the prepared dummy load into the ANT connector of the receiver-transmitter.

b. Audio Devices. The term audio devices applies to microphone, headset, handset, and loudspeaker or to audio signal generator and a-f output meters. These devices are to be used as called for in the individual tests. However, the procedure for connecting the two types of audio devices is the same.

(1) Connect the carbon element of the microphone in series with one set of contacts of the push-to-talk switch (or an audio

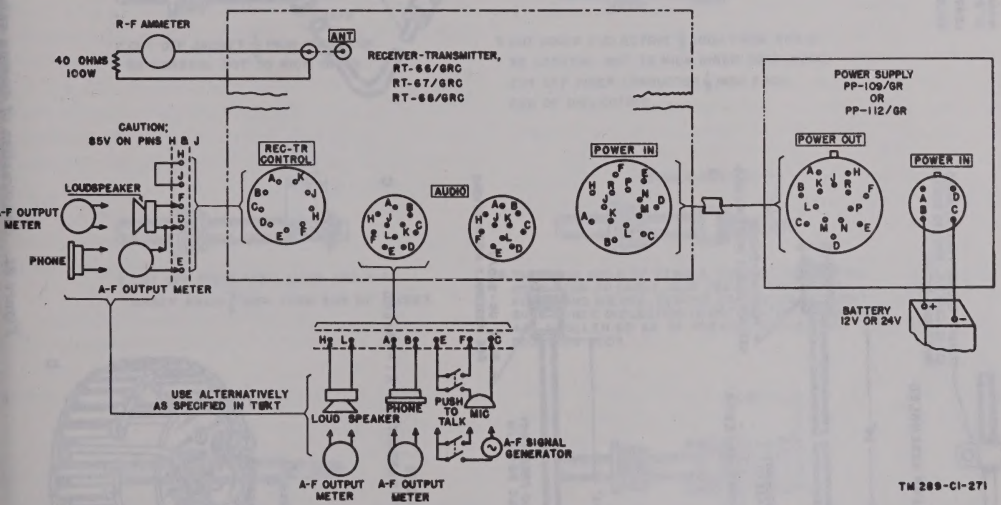

Figure 61. Test setup, functional diagram.

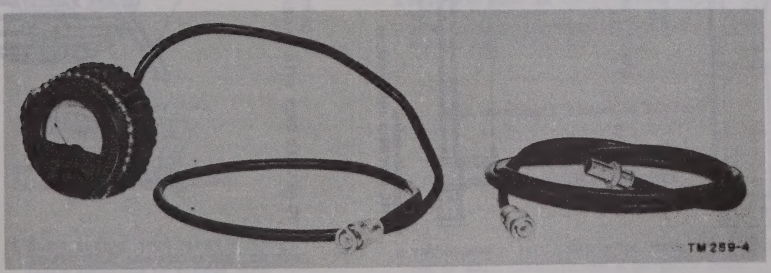

Figure 62. Dummy antenna.

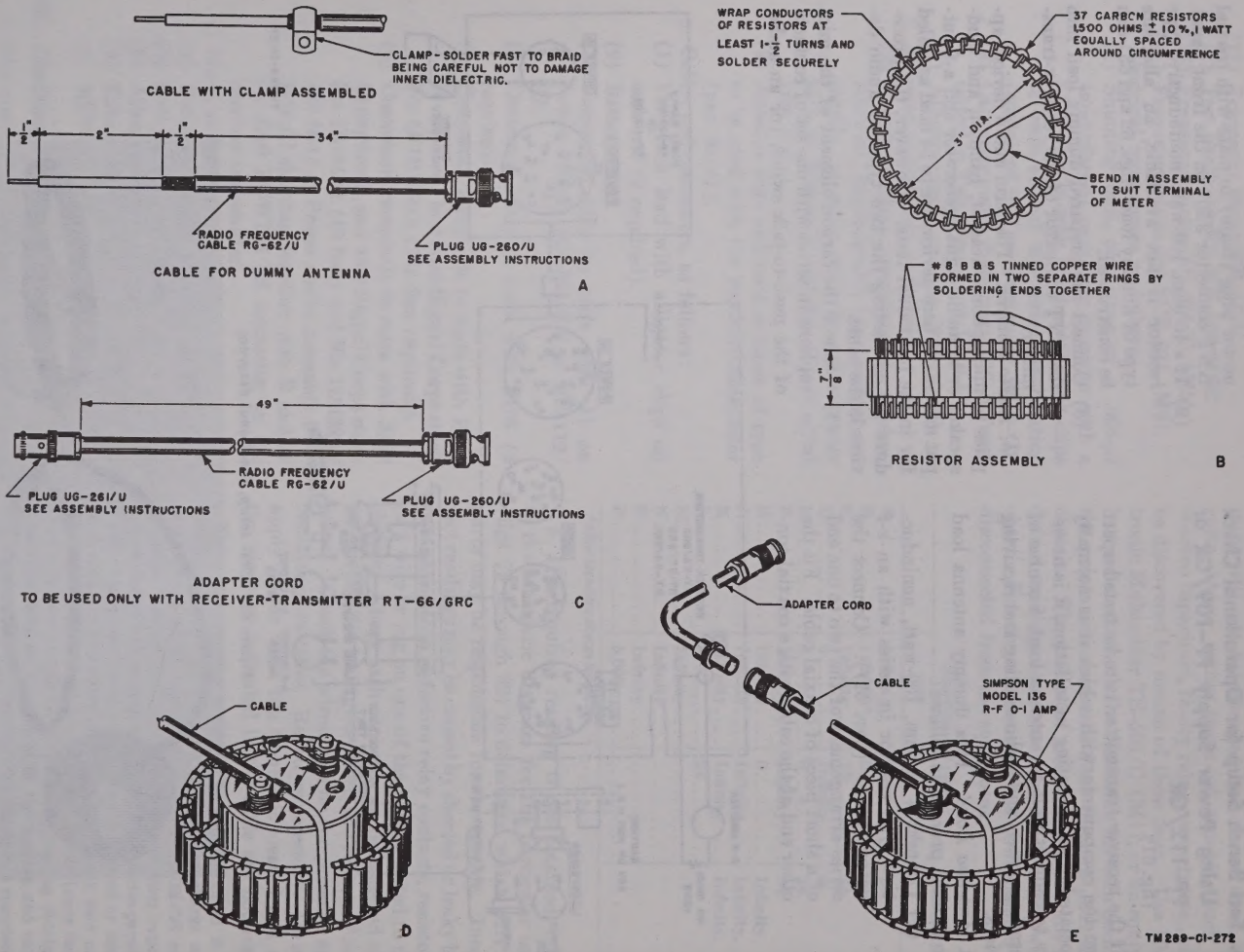
CLAMP - SOLDER FAST TO BRAID BEING CAREFUL NOT TO DAMAGE INNER DIELECTRIC.
CABLE WITH CLAMP ASSEMBLED
1/2"
2"
1/2"
34"
RADIO FREQUENCY CABLE RG-62/U
PLUG UG-260/U SEE ASSEMBLY INSTRUCTIONS
CABLE FOR DUMMY ANTENNA
A
WRAP CONDUCTORS OF RESISTORS AT LEAST 1-1/2 TURNS AND SOLDER SECURELY
37 CARBON RESISTORS 1,500 OHMS ± 10 %, 1 WATT EQUALLY SPACED AROUND CIRCUMFERENCE
3" DIA
BEND IN ASSEMBLY TO SUIT TERMINAL OF METER
8 B & S TINNED COPPER WIRE FORMED IN TWO SEPARATE RINGS BY SOLDERING ENDS TOGETHER
7/8"
RESISTOR ASSEMBLY
B
49"
RADIO FREQUENCY CABLE RG-62/U
PLUG UG-261/U SEE ASSEMBLY INSTRUCTIONS
PLUG UG-260/U SEE ASSEMBLY INSTRUCTIONS
ADAPTER CORD
TO BE USED ONLY WITH RECEIVER-TRANSMITTER RT-66/GRC
C
ADAPTER CORD
CABLE
SIMPSON TYPE MODEL 136 R-F 0-1 AMP
CABLE
D
E
TM 289-CI-272

Figure 63. Construction of dummy antenna.

RG-62/U CABLE IN UG-261/U OR UG-262/U JACKS

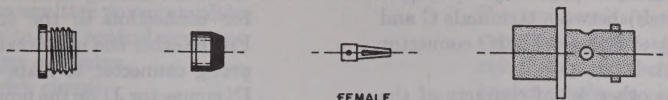

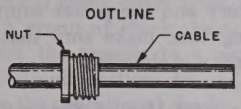

1. CUT OFF SHARP.

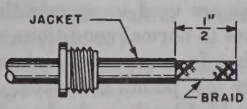

2. CUT OFF JACKET $\frac{1}{2}$ INCH FROM END. BE CAREFUL NOT TO NICK BRAID.

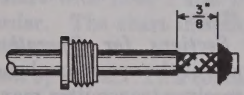

3. CUT OFF INNER INSULATION AND WIRE UNDER BRAID $\frac{3}{8}$ INCH FROM END OF JACKET.

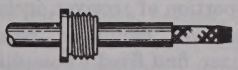

4. TAPER BRAID.

5. SLIDE SLEEVE OVER TAPERED BRAID TO FIT TIGHT AGAINST JACKET. BE SURE INNER SHOULDER OF SLEEVE FITS SQUARELY AGAINST END OF CABLE JACKET.

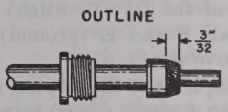

6. WITH SLEEVE IN PLACE, COMB OUT BRAID, FOLD BACK SMOOTH AS SHOWN, AND TRIM TO $\frac{3}{32}$ INCH FROM END.

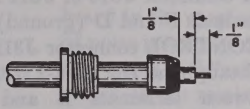

7. CUT INNER DIELECTRIC $\frac{1}{8}$ INCH FROM BRAID. BE CAREFUL NOT TO NICK INNER CONDUCTOR. CUT OFF INNER CONDUCTOR $\frac{1}{8}$ INCH FROM END OF DIELECTRIC.

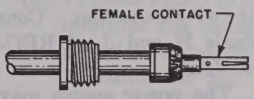

8. TIN INSIDE HOLE OF FEMALE CONTACT, TIN CENTER CONDUCTOR OF CABLE, SLIP FEMALE CONTACT IN PLACE AND SOLDER, REMOVE EXCESS SOLDER. BE SURE CABLE DIELECTRIC IS NOT HEATED EXCESSIVELY AND SWOLLEN SO AS TO PREVENT DIELECTRIC ENTERING BODY.

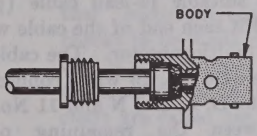

9. PUSH INTO BODY AS FAR AS IT WILL GO, THEN SLIDE NUT INTO BODY AND SCREW INTO PLACE, WITH WRENCH, UNTIL MODERATELY TIGHT. HOLD CABLE AND SHELL RIGIDLY AND ROTATE NUT.

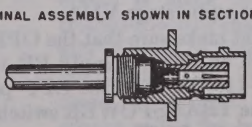

10. THE ASSEMBLY FOR PLUGS IS THE SAME EXCEPT FOR THE USE OF MALE CONTACTS AND A UG-260/U BODY.

TM 289-CI-273

Figure 64. Assembly instructions for connectors, Plug UG-260/U, and Jack UG-261/U, to cables.

signal generator in series with one section of a DPST (double-pole, single-throw) switch) between terminals C and E (ground) of either AUDIO connector J310 or J311.

(2) Connect the other set of contacts of the microphone push-to-talk switch (or the other section of the DPST switch) between terminals F and E (ground) of connector J310 or J311.

(3) Connect a headphone or the earpiece of a handset (or an a-f output meter) between terminals A and B of connector J310 or J311.

(4) Connect a loudspeaker (or an a-f output meter) between terminals L and H (ground) of connector J310 or J311 and between terminals F and D (ground) of REC–TR CONTROL connector J312.

(5) Connect a headphone (or an a-f output meter) between terminals B and D (ground) of connector J312.

Note. If desired, a switching arrangement may be provided to connect headphones or the loudspeaker to the terminals required in the test procedures. It is not necessary to duplicate meters, headphones, or loudspeakers.

c. External Control Connection. Connect jumper across terminals H and J of REC-TR CONTROL connector J312.

d. Power Supply. The power source may be either of the following combinations: Power Supply PP–109/GR and a 12-volt storage battery or Power Supply PP–112/GR and a 24-volt storage battery. Proceed as follows:

(1) Prepare a suitable 14-lead cable (par. 52*g*(6)). Fit each end of the cable with the 14-pin multiconnector. The cable is to be made of 3 No. 16 wires connected between pins D, L, and N and 11 No. 20 wires between the remaining pins. (Power Cable Assembly CX–1210/U can be used instead, if pins B and M on J309 are shorted together.) The use of this cable will supply reduced plate voltage to the power audio stage V116.

(2) At this point make sure that the OPERATE switch on Power Supply PP–109/GR or PP–112/GR is in the OFF position, and the TRANSPOWER switch on that unit is in the LOW position.

(3) Connect the cable between the POWER IN connectors of the two units.

(4) Fit one end of a heavy duty two-conductor battery cable with battery clips for connection to the storage battery. Fit the other end of the cable with a four-prong connector to mate with POWER IN connector J1 on the power supply unit.

(5) Connect the battery cable between the battery and the power supply unit. In doing this, make sure that the correct polarity is observed.

55. Purpose and Use of Operational Check Chart

a. Purpose. The operational checks (par. 56) serve as a first step in sectionalizing trouble in the receiver-transmitter. The panel-mounted controls and facilities are used to operate the equipment under as close to normal conditions as possible at a test bench. In some cases, internal measurements at key test points are made. The trouble symptoms yielded by these checks, when properly interpreted on the basis of the repairman's knowledge of the circuit arrangement of the receiver-transmitter (ch. 2), will point to specific circuit sections as being defective, and to additional checks necessary to further limit the trouble to a particular stage.

b. Circuit Sections for Operational Checks. For the purpose of the operational checks, the circuits of the receiver-transmitter may be grouped functionally into the following sections:

(1) H-f portion of receiver, including:
  (*a*) Receiver r-f amplifier and receiver first mixer.
  (*b*) Crystal oscillator-harmonic generator.
  (*c*) First harmonic amplifier.

(2) L-f portion of receiver, including:
  (*a*) Receiver oscillator, receiver second mixer, first fixed i-f amplifier, first and second variable i-f amplifiers, and first and second limiters.
  (*b*) Discriminator.
  (*c*) Receiver audio amplifiers.

(3) Transmitter l-f section, including:
  (*a*) Microphone circuit.
  (*b*) Transmitter oscillator.
  (*c*) Reactance modulator.

(4) Transmitter h-f section, including:
  (*a*) Crystal oscillator-harmonic generator.
  (*b*) First and second harmonic amplifiers.
  (*c*) Transmitter mixer.

(*d*) Transmitter r-f amplifier.
(*e*) Transmitter driver.
(*f*) Transmitter power amplifier.
(5) Push-to-talk control circuits.
(6) Ringer oscillator.
(7) Squelch circuit.

c. Additional Trouble Sectionalization Data. The operational check chart (par. 56) is supplemented by a group of check charts that serve to further limit the trouble to a particular stage within the circuit section determined as being defective by the operational checks. These charts include—

(1) Receiver trouble sectionalization chart (par. 57).
(2) Transmitter trouble sectionalization chart (par. 58).
(3) Receiver-transmitter tracking check chart (par. 59).
(4) Filament circuit trouble localization chart (par. 60).

d. Use of Operational Check Chart. The tests given in the operational check chart follow a certain specific sequence. In each test it is assumed that the preceding tests have been made and that the troubles discovered have been eliminated. Accordingly, start with item 1 and proceed in the indicated order. The chart includes several columns, as follows:

(1) *Item of check.* This column assigns the numerical sequence to the particular check to facilitate future reference to it and describes briefly the purpose of each check.
(2) *Test condition or operation.* This column lists the switches and controls to be operated and the conditions to be met. The microphone, headset, handset, loudspeaker, power supply, and the *standard receiver-transmitter* (called for in some cases) are not part of the set being tested, but are needed in making the tests. To facilitate identification, meter and signal generator references corresponding to those given in paragraph 52 are included. It should be noted, however, that the nature of the data in the *normal indication* column should serve as a guide in the selection of meters and signal generators.
(3) *Normal indication.* Both aural and visual indications are outlined to show what to expect after the test conditions have been met. If these indications are not met as specified, a trouble condition exists. For best results the repairman should be acquainted sufficiently well with the circuit theory and the actual operational behavior of the receiver-transmitter to be able to give correct interpretation to the normal indications. For example, in the case of item 3, which is a qualitative check of receiver operation based on the presence of noise in the r-f and i-f circuits, absence of noise shows that the receiver is defective at some point. Audibility of the noise does not prove conclusively, however, that the entire receiver functions properly. The r-f stage may be defective and yet noise may be heard in the earpiece. Since the volume of noise is a function of the total gain of the stages, a defect in the r-f and mixer stages of the receiver will show up as a reduction in the volume of noise heard. The same is true of the sidetone check. Proper interpretation of the volume of sidetone will give a more precise meaning to the normal indication for item 13.
(4) *Possible causes of trouble.* This column indicates the circuit sections to be suspected as being defective if the normal indication is not obtained. In cases where several types of trouble symptoms are possible, the circuit sections involved in each type of trouble symptom are listed.
(5) *Further checks.* This column lists further sectionalization or localization checks to be made if the normal indication is not obtained. Where further operational checks in the operational check chart are called for, perform each operational check, note the resultant indication and, if abnormal, follow through as indicated in the further checks column for that operational check. Where reference is made to the supplementary trouble-shooting charts (*c* above), it usually will not be necessary to perform all the checks listed in the supplementary chart, but only for the circuit group or groups called for by the particular possible causes of trouble and further checks of the operational check chart.

56. Operational Check Chart

Caution: Turn off power when making resistance or continuity measurements.

Item of check	Test condition or operation	Normal indication	Possible causes of trouble	Further checks
Preliminary	Set up receiver-transmitter as shown in figure 61 and as described in paragraph 54. Turn DIAL LIGHT OFF-ON RING switch to OFF position. Turn power supply OPERATE switch to TRANS & RECEIVE. Turn power supply TRANS POWER switch to LOW.			
1. Receiver tube filaments circuits.	Turn METER switch in succession to each of positions 7 through 11.	Panel meter reads near center of scale for each switch position.	Defective receiver tube filament or filament circuit component.	Make checks indicated on filament circuit trouble localization chart (par. 60) for particular METER switch position.
2. Filament circuit of receiver tube V1.	Visually note whether tube V1 is lighted.	Tube V1 is lighted	Defective wiring or filament of V1.	Check V1 and filament circuit of V1 (fig. 37).
3. Overall receiver operation (rough check).	VOLUME control in maximum clockwise position, SQUELCH control in extreme counterclockwise (OFF) position.	Rushing noise is heard in earphones and in loudspeaker.	Defective receiver	*a.* Check coaxial cable, connector P1, and J101 (fig. 4) to see that they are connected properly. *b.* Make listening check in item 4 below.
4. Overall receiver operation (listening check).	Same as in item 3 above. Apply carrier signal with 1-kc modulation at ±15-kc deviation (G1) 2 μv (microvolt) to ANT connector. Tune in signal with MCS and TENTH MCS dials.	Tone should be heard in all three audio output connections.	If no signal is heard at any of three audio output connections, defective circuit exists at some point in receiver.	Make sidetone check in item 1 below to sectionalize trouble to receiver circuits preceding or following receiver second mixer stage. Follow up with appropriate checks indicated in receiver trouble sectionalization chart (par. 57).
	(Alternatively, a signal from a transmitter, possibly the ringing signal, may be tuned in and used for this check.)			
	a. Connect headset between A of J310 or J311 and chassis.		*a.* If signal is heard at B of J312 but not at A of J310 or J311, first a-f amplifier circuit is defective.	*a.* Check circuit associated with V115 and tube (par. 57, item 1).

	b. Connect headset between B of J312 and chassis.		*b.* If signal is heard at A of J310 or J311 but not at B of J312, fixed level audio amplifier stage, V102, is defective.	*b.* Check circuits associated with V102 and tube V102 (par. 57, item 2).
	c. Connect loudspeaker between L of J310 or J311 and chassis.		*c.* If signal is heard at A but not at L of J310 or J311, audio power amplifier stage is defective.	*c.* Check V116 and circuits associated with it (par. 57, item 1).
5. VOLUME control	Same as in item 4. Slowly rotate VOLUME control in counterclockwise direction.	Receiver output level is reduced gradually as control is rotated.	Defective potentiometer R303 or associated circuit components.	Check R303 and associated wiring and circuit components.
6. Receiver squelch operation.	Same as in step 4. Reduce test signal input level to zero. Gradually advance SQELUCH control in clockwise direction. Listen in headphones or loudspeaker.	Rushing noise should disappear abruptly as the control is advanced in clockwise direction.	*a.* Defective squelch circuit.	*a.* Check squelch oscillator tube V103 and squelch circuit (par. 57, item 10).
			b. Poor receiver sensitivity.	*b.* Check receiver stage gain (par. 57).
	Measure test signal input level			
7. Overall receiver operation (quantitative checks).				
a. Audio output	*a.* Rotate SQUELCH control to extreme clockwise position. Raise test signal level until tone is heard in headphones and loudspeaker. Connect a-f output meters (M4) in place of headphones and loudspeaker.	*a.* Meter readings should be as follows: A of J310 is at least .05 watt. L of J310 is 1.0 watt. B of J312 is .03 watt (nominal).	*a.* Incorrect stage gains, particularly a-f amplifiers, and misalined discriminator.	*a.* Make checks in steps *b*, *c*, and *d* below. Follow up with checks indicated in receiver trouble sectionalization chart (par. 57, items 1 and 2).
b. Receiver frequency	*b.* Remove modulation from test signal. Connect M1 between terminals 7 and 1 of test socket X200.	*b.* Discriminator meter reads zero when test signal frequency is tuned in correctly.	*b.* Receiver oscillator (V101) or crystal oscillator-harmonic generator (V3) off-frequency. Misalined discriminator circuit.	*b.* Check frequency of oscillators as described in item 8 below. Follow up with appropriate checks in paragraph 57, item 8, or paragraph 58, items 1, 2, 3, and 4. Check discriminator circuit alinement as described in receiver trouble sectionalization chart (par. 57, item 4).
c. Overall receiver sensitivity.	*c.* Apply unmodulated r-f test signal (G1) as before. Connect M1 between terminals 5 and 1 of X200. Adjust signal input level to 1.0 μv.	*c.* Meter reads at least 1 volt.	*c.* Defective receiver stage	*c.* Check receiver alinement, item *d* below, and stage gains par. 61).

56. *Operational Check Chart*—Continued

Item of check	Test condition or operation	Normal indication	Possible causes of trouble	Further checks
7. Overall receiver operation—Continued				
d. Receiver alinement	*d.* Remove test signal. Connect meter (M1) between terminals 7 and 1 of X200.	*d.* Meter should read 0± 1.6 volts.		*d.* Recheck item *b* above.
	e. Connect meter (M1) to terminals 5 and 1 of X200. Set MCS dial to any convenient setting. Set TENTH MCS dial to 0. Apply calibrated unmodulated test signal at frequency of MCS dial setting and at level of approximately 1 μv to ANT connector. Vary test signal frequency until meter shows peak reading. Note test signal frequency for which peak reading occurs.	*e.* Meter peaks for test signal frequency within 10 kc of nominal dial frequency.	*e.* Misalined receiver oscillator. Misalined i-f or r-f amplifier stages.	*e.* Check in accordance with receiver trouble sectionalization chart (par. 57, items 7, 8, and 9) and realine in accordance with paragraph 75.
8. Receiver oscillator tracking.	*a.* Couple frequency meter (M5) to receiver oscillator by placing a few turns of wire over tube V101 and connecting ends of wire to frequency meter. Turn MCS dial to any convenient detent position.	*a.* At zero setting of TENTH MCS dial, frequency meter should read 3.05 mc. Tolerance of ±5 kc is allowed.	*a.* Incorrect alinement of receiver oscillator.	*a.* Realine receiver oscillator V101 (par. 75). Check tuning mechanism as in item 9.
	b. Turn TENTH MCS dial in succession to each of its detent positions (starting with 0), and measure frequency for each.	*b.* As dial is advanced, frequency shown by meter should increase in 100-kc steps.	*b.* Defective TENTH MCS dial mechanism.	*b.* Check and readjust detent screw settings (par. 75). Check mechanical alinement (par. 69).
9. Tuning mechanism and mechanical couplings.	Repeat item 8, returning to each detent position several times.	Same frequency (within ±1 kc) should be measured every time dial is returned to particular position.	Loose or broken couplings. Loose or defective detent stop screws.	Inspect and adjust as described in paragraph 75*d* and adjust or repair as described in paragraphs 68 and 69.
10. Transmitter tube filaments and filament circuits.	DIAL LIGHT OFF-ON-RING switch in OFF position.	----------	----------	
	OPERATE switch on power supply in TRANS & RECEIVE position.	----------	----------	
	TRANS POWER switch on power supply in LOW position.	----------	----------	

	Turn METER switch in succession to positions 2 through 6, operating microphone push-to-talk switch each time.	Panel meter reads near center of scale for each switch position.	*a.* Defective transmitter tube filament or filament circuit component.	*a.* Refer to filament circuit trouble localization chart (par. 60).
			b. Defective control circuit, particularly relay 0101.	*b.* Make point-to-point resistance and voltage measurements (pars. 62 and 63).
11. Filament of tube V11	Operate microphone push-to-talk button and observe whether tube V11 is lighted.	Tube should be lighted	Defective V11 filament or filament circuit.	Check tube and wiring.
12. Transmitter power output (low power).	Same as step 10, except: METER switch in RF position. Antenna load connected. TENTH MCS dial in 0 position. MCS dial set to lowest mc position. Push-to-talk switch operated. Observe panel meter reading.	Meter should read approximately one-third of full scale.	*a.* Defective l-f generator circuits (including transmit oscillator and modulator).	*a.* Make sidetone check, item 13 below.
			b. Defective h-f generator circuits (including crystal oscillator-harmonic generator and first and second harmonic amplifiers).	*b.* Make measurements indicated in paragraph 58, items 1 through 4.
			c. Defective transmitter h-f circuits (including mixer, r-f amplifier, driver, and power amplifier).	*c.* Make measurements indicated in paragraph 58, items 5 through 11.
			d. Defective relay circuits.	*d.* Make voltage measurements at following points (to chassis): Term 4 of J106 (85 volts). Term. 3 of J4 (85 volts). Term. 3 of X11 (250 volts). Term. 1 of X9 (150 volts). Make voltage measurements at terminals of relays O1 and O101 (par. 63).

56. *Operational Check Chart*—Continued

Item of check	Test condition or operation	Normal indication	Possible causes of trouble	Further checks
13. Sidetone check	Same as in item 12. Talk into microphone. Listen in headphones and loudspeaker.	Sidetone is heard	*a.* Defective modulator or transmit oscillator.	*a.* Make measurements indicated in paragraph 58, items 5, 6, and 7.
			b. Defective relay O101 circuits.	*b.* Measure voltage between terminal 4 of O101 and chassis. Reading of 6.3 volts should be obtained. Measure voltage between terminal 8 of O101 and chassis. Reading of 85 volts should be obtained. If above readings are not obtained, relay O101 or its circuits are defective. Turn off power and make point-to-point resistance measurements indicated in paragraph 62.
			c. Defective microphone circuit.	*c.* Make ringing check, item 14. By elimination, microphone circuit probably is faulty if ringing sidetone is heard. Make point-to-point resistance measurements (par. 62).
			d. Defective receiver circuits between receiver second mixer and audio output circuits.	*d.* Make checks indicated in items 7, 1, 2, 4, and 5, paragraph 57.
14. Ringing check	Same as in item 12. Operate S302 to RING. Do not operate push-to-talk switch.			
	a. Listen in headphones or loudspeaker.	*a.* 1,600-cycle sidetone is heard.	*a.* Defective ringer oscillator, V104.	*a.* Make measurement indicated in paragraph 58, item 12. Follow up with point-to-point resistance and voltage measurements (pars. 62 and 63).
	b. Observe panel meter with METER switch in position 1.	*b.* Meter reads at least one-third of full scale.	*b.* Defective relay circuits	*b.* See item 13*b* above.

	c. Observe dial light	*c.* Dial light goes on	*c.* Defective switch S302	*c.* With switch S302 in RING position, check for continuity between terminals 4 and 6 of J106, and between terminal F of J310 and chassis. If zero readings are not obtained for both measurements, switch contacts are open. Check switch and associated wiring.
15. Dial light circuit	Same as above, but turn S302 to DIAL LIGHT ON.	1,600-cycle tone disappears, light stays on.	Defective dial light or associated circuit components and wiring.	Refer to schematic diagram (figs. 20 and 21) and check dial lamp circuit for continuity.
	Turn S302 to DIAL LIGHT OFF	Light goes out	Defective S302 contacts	
16. Overall transmitter frequency, tracking and dial calibration.	Same as in item 12. Couple frequency meter to antenna load (M5). Rotate MCS dial in succession to each of its mc detent positions. Operate push-to-talk switch for each dial position and read frequency meter.	For each setting of dial, frequency meter shows frequency within 7.5 kc of nominal frequency indicated by dial.	*a.* MCS control requires recalibration. *b.* Crystal oscillator-harmonic generator and harmonic amplifier off-frequency or defective. *c.* Transmit oscillator off-frequency or defective.	*a.* Check mechanical alinement (par. 69). Check calibration and alinement with reference to paragraph 59. *b.* Check in accordance with paragraph 58, items 1 through 4. Follow up with mechanical alinement (par. 69) and electrical alinement (par. 76). *c.* Check in accordance with paragraph 58, items 5 and 6. Follow up with alinement (pars. 69 and 77).
17. Transmitter power output (HIGH power).	Same as in item 12, except as follows: DIAL LIGHT ON-OFF-RING switch on RING. TRANS POWER switch on power supply on HIGH. METER switch on RF.	Meter on front panel reads at least one-half of full scale.	Transmitter h-f circuits need alinement (particularly driver and power amplifier stages and antenna circuit).	Aline in accordance with paragraph 76, with high power applied.

57. Receiver Trouble Sectionalization Chart

Item of check	Test conditions	Test signal connections	Level	Frequency	Meter connections	Meter readings	Further checks
1. Variable gain audio circuits V115 and V116.	SQUELCH control in OFF position. VOLUME control in maximum clockwise position. DIAL LIGHT OFF-ON. RING switch in OFF position. OPERATE switch on power supply in RECEIVE position. Switch between H and J of J312 closed.	Audio oscillator (G3) between pin 3 of V113 (discriminator output) and ground.	10 volts rms	1,000 cps	*a.* Between A and H of J310 (M4).	*a.* At least 50 mw.	*a.* Make detailed check of first audio amplifier stage V115. See point-to-point resistance chart (par. 62) and point-to-point voltage chart (par. 63). Check V115. Check VOLUME control R303 and associated components.
					b. Between L and J of J310.	*b.* At least 1 watt.	*b.* Make detailed check of power audio stage V116. See point-to-point resistance and voltage charts (pars. 58 and 59).
2. Fixed level audio stage V102.	Same as above	Audio oscillator (G3) between pin 3 of V113 and chassis.	3.0 volts rms	1,000 cps	Between B and D of J312 (M4).	30 mw nominal	Make detailed check of fixed level audio stage V102. See point-to-point resistance and voltage charts (pars. 62 and 63). Adjust R103 to obtain required output.
3. Discriminator tuning.	Same as above SQUELCH control OFF.	Signal generator (G1) between pin 6 of V112 and chassis.	.5 volt rms	1.4 mc			If incorrect reading is obtained, make following additional checks:
					a. Between 7 and 1 of X200 (M1).	*a.* 0±.05 volt	*a.* Check V112 point-to-point resistances (par. 62) and voltages (par. 63). Aline discriminator circuit (T113) (par. 75).
					b. Between 3 of X113 and chassis (M1).	*b.* 15 volts maximum.	*b.* Check tubes V113 and V114.

4. Discriminator balance.	Same as above	Same as above	.5 volt rms	1.43 mc 1.37 mc	*a.* 6 and 2 of X200 (M1). *b.* 6 and 2 of X200 (M1).	*a.* +10 volts minimum. *b.* −10 volts minimum.	Readings A and B should be of opposite polarity and numerically equal to within .6 volt. If these requirements are not met, check discriminator components involved in maintaining balance (par. 62).
5. Spurious i-f oscillations.	Same as above	None	None	None	7 and 1 of X200 (M1).	0±.09 volt	If much greater current is obtained, fixed i-f amplifier response is nonsymmetrical. Check fixed i-f circuits for symmetry (par. 83) and realine (pars. 69 and 75).
6. Receiver second mixer and fixed i-f amplifier.	Same as above	Signal generator (G1) between pin 6 of V109 and chassis.	3,600 μv	1.4 mc	5 and 1 of X200 (M1).	.6 volt	If meter reading is not obtained, check individual stage gains (par. 61) for V109 through V112. Aline fixed μ–f amplifiers V109 through V112 (pars. 69 and 75).
7. Receiver oscillator tracking.	*a.* TENTH MCS (kc) dial in detent position 0. *b.* TENTH MCS dial in detent position 9.	Signal generator (G1) between: *a.* Pin 6 of V109 and chassis. *b.* Same as above.	*a.* 4,000 μv *b.* 3,800 μv	*a.* 4.45 mc *b.* 5.35 mc	*a.* 7 and 1 of X200 (M1). *b.* 5 and 1 of X200 (M1).	*a.* ±.16 volt *b.* .6 volt	If tracking error exceeds limits specified, realine oscillator and fixed i-f amplifier (pars. 69 and 75). Check kc dial calibration (par. 75).
	c. Change setting of TENTH MCS dial successively through positions 1 through 9.	*c.* Same as above.	*c.* 3,800 μv	*c.* For each detent position of dial, increase test signal frequency by 100 kc.	*c.* 7 and 1 of X200 (M1). 5 and 1 of X200 (M1).	*c.* 0±.05 volt for each reading. .6 volt for each reading.	
8. Receiver first mixer and variable i-f amplifier-gain measurement.	*a.* TENTH MCS dial in position 0. *b.* TENTH MCS dial in position 9.	Signal generator (G1) between: *a.* Pin 6 of V2 and chassis. *b.* Same as above.	*a.* 57 μv *b.* 29 μv	*a.* 4.45 mc. *b.* 5.35 mc	*a.* 7 and 1 of X200 (M1). 5 and 1 of X200 (M1). *b.* Same as above.	*a.* ±.16 volt. 1.5 volts. *b.* Same as above.	*a.* Check gain of individual stages V2 and V170 through V109. Check alinement of variable i-f amplifier (pars. 69 and 75). *b.* Same as above.

57. *Receiver Trouble Sectionalization Chart*—Continued

Item of check	Test conditions	Test signal connections	Level	Frequency	Meter connections	Meter readings	Further checks
9. Receiver r-f amplifier.	*a.* TENTH MCS dial on 0.	Use signal generator G1 for connections below.					
		a. ANT connector.	*a.* 0		*a.* 7 and 1 of X200 (M1). 5 and 1 of X200 (M1).	*a.* 0±.16 volt. 2 to .7 volts.	
	b. MCS dial turned to frequency indicated in the frequency column.	*b.* ANT connector on Receiver-Transmitter RT–66/GRC.	*b.* .4 μv .3 μv	*b.* 20 mc. 27 mc.	*b.* 5 and 1 of X200 (M1)	*b.* 1.5 volts.	*b.* Make stage gain checks (par. 63). Aline r-f circuits (pars. 69 and 74).
		c. ANT connector on Receiver-Transmitter RT–67/GRC.	*c.* .4 μv .3 μv	*c.* 27 mc. 38 mc.	*c.* 5 and 1 of X200 (M1).	*c.* 1.5 volts.	*c.* Same as *b* above.
		d. ANT connector on Receiver-Transmitter RT–68/GRC.	*d.* .7 μv .5 μv	*d.* 38 mc. 54 mc.	*d.* 5 and 1 of X200 (M1).	*d.* 1.5.	*d.* Same as *b* above.
10. Squelch circuit.	Same as in item 1. SQUELCH control in extreme clockwise position.	None.			Pin 2 of V103 and chassis (M1).	−40 volts to −70 volts.	Make point-to-point resistance (par. 62) and voltage (par. 63) measurements for V103.

58. Transmitter Trouble Sectionalization Chart

Item of check	Test conditions	Meter connections	Normal reading	Additional checks and remarks
Preparatory	Power supply OPERATE switch in TRANS & RECEIVE position. Power supply TRANS POWER switch in LOW position. DIAL LIGHT OFF-ON-RING switch S302 in OFF position. METER switch in RF position. Antenna load connected.			Until trouble in transmitter has been cleared definitely, TRANS POWER switch should be kept in LOW position to prevent additional damage to equipment.
1. Crystal oscillator	TENTH MCS dial in 0 detent position. Set MCS dial successively to each detent position, starting with lowest mc setting.	Connect M1 between stand-off insulator 3J and chassis.	9 to 20 volts for each MCS dial setting.	Check V3. Make point-to-point resistance and voltage measurements (pars. 62 and 63). Check crystal associated with dial position for which incorrect reading is obtained. Check mechanical alinement of crystal switch S1 (pars. 67 and 69).
2. Harmonic generator	*a.* MCS dial in highest mc position.	*a.* Connect M1 between test point E4H and chassis.	*a.* —.7 volt minimum.	*a.* Try adjusting tuning slug of L6 in tuning unit T3 for peak reading on meter. Try adjusting trimmer capacitor C16 for peak reading on meter. If steps *a* and *b* fail to produce required readings, check mechanical alinement (par. 69). Check V3. Make sure that marker lines on gears mounted on C17 line up to form straight line. Check circuit components by point-to-point resistance and voltage measurements (pars. 62 and 63). Realine circuit (par. 76).
	b. MCS dial in lowest mc position.	*b.* Same as above	*b.* —1.9 volts	*b.* Same as above.
3. First harmonic amplifier, V4.	*a.* MCS dial in highest mc position.	*a.* Connect M1 between E2 and chassis.	*a.* 1.0 to 4 volts	*a.* Try adjusting tuning slug of L8 in T4 for peak reading on meter. Try adjusting trimmer capacitor C26 for peak reading on meter. If above fails to produce required reading: Check tube V4. Make point-to-point resistance and voltage measurements (pars. 62 and 63). Realine circuit (par. 76).
	b. MCS dial in lowest mc position.	*b.* Same as above	*b.* Same as above	*b.* Same as above.

58. *Transmitter Trouble Sectionalization Chart*—Continued

Item of check	Test conditions	Meter connections	Normal reading	Additional checks and remarks
4. Second harmonic amplifier, V5.	Operate push-to-talk switch. *a.* MCS dial in highest mc position.	*a.* Connect M1 between E6A and E6B.	*a.* 2.2 to 3 volts	*a.* Adjust tuning slug of L9 in T5 for peak reading on meter. Adjust trimmer capacitor C33 for peak reading on meter. If above fails to produce required reading: Check tube V5 and check circuit components by point-to-point resistance and voltage measurements (pars. 62 and 63). Realine circuit (par. 76).
	b. MCS dial in lowest mc position	*b.* Same as above	*b.* Same as above	*b.* Same as above.
5. Transmitter oscillator, V104A.	VOLUME control in maximum clockwise position. SQUELCH control OFF. TENTH MCS in 0 position. MCS dial in lowest mc detent position. Operate push-to-talk button.	*a.* Between 7 and 1 of X200 (M1).	*a.* 0±.05 volt	*a.* Defective or misalined transmitter oscillator circuit. Realine in accordance with paragraph 76. If alinement fails, check V4. Make point-to-point resistance and voltage measurements (pars. 62 and 63). Defective discriminator circuit. Check in accordance with paragraph 57, items 3 and 4.
		b. Between 5 and 1 of X200 (M1).	*b.* 1.45 to 1.75 volts	*b.* No-reading indication points to dead or badly misalined transmitter oscillator. *Note.* Output of transmitter oscillator is fed back through receiver circuits as sidetone. Accordingly, if oscillator is on frequency and tracks with receiver oscillator V101, discriminator output will be zero, assuming that discriminator functions properly.
6. Transmitter oscillator tracking.	Same as above Set TENTH MCS dial successively to detent positions 0 through 9.	Between 7 and 1 of X200 (M1).	0±.16 volt	*Note.* Tracking error is determined by noting extent to which discriminator output differs from zero volt for each setting of TENTH MCS dial. If oscillator is off frequency for one or more detent positions but not for all positions, readjust dial detent screws (par. 75*d*). If oscillator is off frequency for all dial positions by nearly same amount, check mechanical alinement (par. 69) and electrical alinement (par. 76). If frequency cannot be changed by varying dial knob, there is slippage in gear couplings or a broken gear drive. Inspect and check mechanical alinement (par. 69). If tracking error for any one or more dial positions exceeds 5 kc, check adjustment of detent screws (par. 75*d*).

				If tracking error exceeds 5 kc for all dial positions, check alinement (par. 76).
7. Modulator operation.	*a.* Same as in item 5. Set S302 to RING position.	*a.* Between 7 and 1 of X200 (M1).	*a.* .05 volt	Check modulator circuit as described in item 7 below. This check assumes that transmitter oscillator and receiver i-f and discriminator circuits are functioning.
	b. Listen for sidetone in headphones and loudspeaker.		*b.* Sidetone is heard.	If tone is not heard, or if incorrect meter reading is obtained, make point-to-point resistance and voltage measurements on modulator circuit. Check tubes V105 and V106.
8. Transmitter mixer and r-f stages V6, V7, and V8.	Operate push-to-talk switch. *a.* MCS dial in highest mc position.	*a.* Connect M1 between E7B and E8G.	*a.* 6 volts minimum	*a.* Adjust tuning slug of L12 in T6 for peak reading on meter. Adjust trimmer C1E for peak reading on meter. If above adjustments fail to provide required readings: Check tubes V6, V7, and V8. Check circuit components by point-to-point resistance and voltage measurement. Realine circuits (par. 76). Also check to see if cable from i-f chassis is plugged in.
	b. MCS dial in lowest mc position. Operate push-to-talk switch.	*b.* Same as above	*b.* Same as above	*b.* Same as above.
9. Transmitter drivers, V9 and V10.	*a.* MCS dial in highest mc detent position.	*a.* Connect M1 between test points E9F and E9G.	*a.* 3.5 volts minimum (in RT-66/GRC, 2.5 volts minimum).	*a.* Check tubes V9 and V10. Try adjusting L18 and C1K for peak readings on meter. Realine stage in accordance with paragraph 76. If alinement fails to provide correct reading, make point-to-point resistance and voltage measurements (pars. 62 and 63). *Do not touch neutralization adjustments.* These are sealed with glyptal at factory. To determine whether neutralization is required, proceed as follows: After required reading is obtained, disconnect P2 and J102 (coaxial cable from V6 on r-f chassis to transmitter oscillator output on i-f chassis). Observe meter. Voltage should drop to zero. If this requirement is not met, neutralization adjustment is necessary. ***Caution:*** Neutralization adjustment is tricky. It should be performed by experienced personnel only.
	b. MCS dial in lowest mc detent position.	*b.* Same as above	*b.* Same as above	*b.* Same as above.

58. *Transmitter Trouble Sectionalization Chart*—Continued

Item of check	Test conditions	Meter connections	Normal reading	Additional checks and remarks
10. Transmitter power amplifier V11.	Same as *a* above	*a.* Between E9H and E9J (M1). ***Caution:*** High voltages are present at E9H and E9J. Do not touch meter M1 while push-to-talk switch is operated.	*a.* 4-volt maximum	*a.* Check alinement (par. 76) of plate circuit (L22 and C1L). Tune for a dip across E9H and E9J.
		b. Panel meter with METER switch in RF position.	*b.* Less than one-half scale.	*b.* Adjust TRANS ANT COUPLING for minimum coupling (extreme counterclockwise) for alinement of power amplifier stage.
		c. Ammeter in dummy load.	*c.* .5 ampere	*c.* Check and adjust coupling control as described in paragraph 76. Check VII and associated circuit components (pars. 62 and 63). Check adjustment of TR ANT TUNE capacitor C74, and of cam-adjusting screws. See item 11 below.
11. Transmitter circuit tracking.	Operate push-to-talk switch. Turn MCS dial in succession to each of its detent positions. TENTH MCS dial in position 0.	Between E9H and E9J (M1). Panel meter with METER switch in RF position. Dummy load meter.		Decouple TRANS ANT COUPLING (turn to extreme counterclockwise position). For each dial detent position, adjust corresponding REC ANT TUNE screw on cam to obtain peak reading on dummy load meter (par. 76). If peaking is not possible, or if after peaking, with TRANS ANT COUPLING tuned for maximum output on meter in dummy load, required meter readings are not obtained, refer to transmitter tracking chart (par. 59) and make measurements indicated for particular dial settings.
12. Ringer oscillator	Switch S302 in RING position	Connect M1 across winding 4–5 of T106.	1.8 volts ac	Make resistance and voltage measurements (pars. 62 and 63). Check V104.

59. Receiver-Transmitter Tracking Check Chart

The readings obtained at the several test points of the transmitter circuits for the various detent settings of the MCS dial are shown in *c* below. It is assumed that the transmitter oscillator (4.45 to 5.45 mc) is working properly and that the tuning of the oscillator and calibration is correct. Check tracking of the TENTH MCS dial and associated capacitor as described in paragraph 75*e*. The values shown in the table are minimum values. Some deviation from these values is to be expected in a normally operating transmitter.

a. Measurement. For any setting of the MCS dial, with the TENTH MCS control in position 0, connect the vacuum-tube voltmeter (M1) to each of the indicated test points in succession. Obtain the readings and record them for reference and comparison. These readings will serve as a calibration chart for the particular set. Note, however, that variations in the same set from time to time are to be expected because of some backlash and mechanical linkages. The push-to-talk button on the microphone must be operated and the full transmitter power applied. An alternative method of energizing the transmitter circuits is to connect ground to terminal K on the front panel **REC-TR CONTROL** connector. Compare the readings obtained with the data given in the chart.

b. Analysis of Measurement Data. Proper interpretation of the measurement data will make it possible to locate the specific cause of the trouble.

(1) If, for a given MCS dial detent position, the reading for any of the test points, 3J, E2L, E4H, E6A, or E6B, is not correct, the tracking between sections of tuning capacitor C17 is incorrect. Realine the crystal oscillator-harmonic generator circuits as described in paragraph 75*f*.

(2) If the readings for any of the other E test points are incorrect, the tracking of r-f tuning capacitor C1 is incorrect. Realine in accordance with paragraph 75.

(3) If the readings for test points 3J, E2L, E4H, E6A, and E6B are correct, but those for the remaining E test points are incorrect, the coupling arrangement to capacitor C1 is defective. (The transmitter oscillator is assumed to function properly.)

(4) If approximately the same output is not obtained whenever the MCS control is returned to a particular position, check the tightness of the detent screws and check for backlash in driver gears and the gear drive.

(5) If no tuning is possible by varying the control, there is slippage in the variable capacitor mechanical couplings (par. 69).

c. Tracking Checks

Circuit group	Item of check	Points of measurement (M1)	Minimum acceptable meter readings at any mc detent position	Remedy if reading is incorrect
Crystal oscillator	Crystal activity	3J (V3 pin 3) and chassis.	9 volts	Change crystal.
Harmonic generator	Grid drive of V4	E4H and chassis	−1.9 volts at following frequencies: RT–66/GRC–20 mc and 27 mc. RT–67/GRC–28 mc and 38 mc. RT–68/GRC–39 mc and 53 mc.	Readjust L6, C16, or dial stop.
	Output of V4	E2L and chassis	−1.17 volts	Readjust L8, C26, or dial stop.
	Output of V5 and output of V6.	E6A (+) and E6B (−).	2.1 volts	Readjust L9, C33, or dial stop. Readjust L12 and C1E.

c. Tracking Checks—Continued

Circuit group	Item of check	Points of measurement (M1)	Minimum acceptable meter readings at any mc detent position	Remedy if reading is incorrect
Transmitter r-f circuits.	Grid drive V9 and V10.	E7B (+) and E8G (−).	6.0 volts	Readjust L16 and C1G.
	Grid drive V11	E9G (+) and E9F (−).	−1.4 volts (450-volt supply off) or −.8 volts (450-volt supply on).	Readjust L18, C1K, T8, and neutralization capacitor C65.
	Power output V11	E9H (+) and E9J (−).	1 volt	Readjust L22 and C1M.
	Transmitter power output.	ANT jack J307 (series antenna current into a 40-ohm dummy antenna, par. 52*f*(1)).	.5 ampere	TRANS ANT COUPLING (T9), TR ANT TUNE (C74), or cam.

60. Filament Circuit Trouble Localization Chart

When testing the filament circuits in conjunction with the chart below, the METER switch must follow the sequence of the chart. In all cases the normal reading of meter M301 is center scale. If this reading is not obtained, the probable defective item is listed under the type of reading obtained.

METER switch position	Zero reading	Too low but not zero reading	Too high but not full-scale reading	Full-scale reading
2	L13, C49, C50, C46, C51, R50, C60, C301, R47, C64, combination of R34 and V7. See note 5.	V7	V9	V9, combination of V9 and R44.
3	R57, C52, C61, R48, C63, combination of R35 and V8. See note 5.	V8	V10	V10, combination of V10 and R45.
4	L11, C42, V6, C41, R28, and C43.	C31		V5 and R25.
5	C135, R124, L116, R125, C139, combination of R123 and V106.	V106		V104.
6	V105, R121, C136, and C134			R122.
7	V116, L136, C195, R163, C190, combination of R161 or R162 and V114.	C191, C14, and C13.	V113 and V3	L135, L5, combination of R14 and V3, L4.
8	L7, V4, R19, C23, C22, combination of R18 and V4.		V2	R10, combination of R9 and V2.
9	R107, V102, R105, C112, and C149.	C116		V107, L107, and V103.
10	V108, C154, L125, C174, V110, R150, and C171.	R148, R149, C179, C178, and C185.	V112	L128, V111, L131, combination of R159 and V112.
11	R176, C144C, V115, L122, R142, C164, and C165.	C163 and C107	V109 and V101	L105, L106, L102, combination of R143 and V109, combination of R102 and V101.

Notes:

1 The transmitter power amplifier tube V11, and the receiver first r-f amplifier tube, V1, are not checked by the METER switch. These tubes must be checked by visual inspection. Observe whether (with power applied) the tube filaments are lighted. The filament of V11 is energized when the microphone push-to-talk button is operated.

2. Because of the series-parallel arrangement of the tube filaments, a break in the filament of one tube in a

series string of tubes will cause all the other tubes in the string to go out and will produce indications of a faulty stage involving those tubes.

3. A high reading for all filaments may be caused by a faulty V1 or V11 tube. A low voltage for all tubes may be caused by the operation of the overload relay in the power supply.

4. Turn off all power when replacing tubes.

5. C50 is used only in RT–66/GRC models. C63 and C64 are used only in RT–66/GRC and RT–67/GRC models except those bearing Order No. 1759-Phila-51. R56 and R57 are replaced by coils L14 and L15 in the following models:

Model	Order No.	Serial No.
RT–66/GRC	18651–Phila–49	All.
	32137–Phila–51	All.
	32138–Phila–51	All.
RT–67/GRC	16831–Phila–51	All.
	18651–Phila–49	All.

61. Signal Substitution

a. General. The purpose of the signal substitution or signal tracing checks described in this paragraph is to localize trouble to a particular stage or part within the circuit group of the receiver-transmitter, which has been shown to be defective by the trouble sectionalization charts of paragraphs 56 through 59. The data obtained also serve to determine whether a particular stage or stages need alinement.

b. Test Equipment. The test equipment required for the signal tracing checks is listed in paragraph 52.

c. Test Connections. The dummy antenna load, cabling, and power source should be connected as described in paragraph 54 and as shown in figure 61. The connections for the test meters and the signal source are to be made, as indicated in the stage gain charts in this paragraph, for the particular circuit under test.

d. Signal Tracing in Receiver. In general, the procedure of signal tracing consists of connecting the meter to the final output circuit of the circuit group under test, connecting the signal generator successively to each of the input circuits preceding that output connection, and for each connection of the signal generator to determine the level of the test signal required to obtain the reference reading on the meter. By comparing the values obtained with the data given in the stage gain chart, it is determined whether or not a particular stage provides the required gain. Failure to provide the required gain may be caused either by a faulty component or tube within the stage or to improper alinement. The signal generator and meter connections, the required test signal frequency and test signals levels, and the reference readings are given stage-by-stage in the stage gain chart (*e* below).

(1) For signal tracing purposes, the receiver is sectionalized into four major groups: audio amplifier stages, fixed i-f stages (including limiters and discriminator stages), variable i-f stages (including receiver oscillator and second mixer) and the r-f stages (including crystal oscillator-harmonic generator, first harmonic amplifier, and receiver first mixer).

(2) For measurements on the audio circuits, the reference reading is the nominal audio power output (100 mw) of the receiver. The l-f reference limiter meter reading ((3) below) is the reference level for measurements on all fixed and variable i-f circuits.

(3) The l-f reference limiter reading is obtained as follows: Connect the meter (M1) between terminals 5 and 1 of test socket X200. Connect the test Signal Generator SG–12/U (G1) between terminals 6 of V111, through a .006-μf mica capacitor, and chassis. Set the frequency of the generator to 1.4 mc, and adjust its output level to .5 volt. The meter reading obtained is the l-f reference limiter meter reading and its value will be approximately .6 volt dc; the tuned circuit, T112, can affect the reading. To check alinement of T112, apply the shunting unit (par. 52*e*(1)) between terminal 2 of V111 and ground. Adjust the secondary (L130) of T112 (fig. 6) for maximum reading. Apply the shunting unit across terminal 6 of V112 and chassis. Adjust the primary (L129) of T112 (fig. 6) for maximum reading of l-f limiter meter. It may be necessary to increase the signal generator output level to obtain a reading while performing the latter operation, because of loading by the shunting unit.

(4) The h-f reference limiter meter reading is used as a reference meter reading for measurements of the r-f circuits. The h-f limiter meter reading is obtained by performing the following steps: Connect the meter (M1) between terminals 5 and 1 of test socket X200. Connect Signal Generator SG–12/U (G1) through a .006-μf mica capacitor to terminal 6 of tube V107 and chassis. Set the signal generator frequency to 4.45 mc (TENTH MCS control at 0), and adjust its output level for an increase of the above l-f reference reading by a factor of 3. This should be approximately 1.5 volts dc. Use this reference limiter reading for all measurements of the receiver r-f and first mixer circuits.

(5) The following switch and control settings apply for all measurements on the receiver circuits:

Switch or control	Setting
SQUELCH	OFF.
DIAL LIGHT ON-OFF RING	OFF.
VOLUME	Maximum clockwise.
OPERATE (power supply)	RECEIVE.
TRANS POWER (power supply)	LOW.
Microphone push-to-talk button	Unoperated.
MCS and TENTH MCS dials	To correspond to test frequency used. See chart in subparagraph *e* below.

e. Stage Gain Chart. Connect Signal Generator SG–12/U (G1) between grid of indicated stage and chassis, and connect M1 between the terminals indicated.

Stage	Test signal		Output	
	Frequency (mc)	Input level	Meter point on X200	Level (volts)
V112	1. 4	1.0 volts	6 and 2	3. 75
V111	1. 4	.5 volt	1 and 5	. 6
V110	1. 4	.026 volt	1 and 5	. 6
V109	1. 4	3,600 μv	1 and 5	. 6
V109	4. 45	4,000 μv	1 and 5	. 6
V109	5. 45	3,800 μv	1 and 5	. 6
V108	4. 45	500 μv	1 and 5	. 6
V108	5. 45	460 μv	1 and 5	. 6
V107	4. 45	52 μv	1 and 5	. 6
V107	5. 45	40 μv	1 and 5	. 6
V107	4. 45	156 μv	1 and 5	1. 5
V107	5. 45	120 μv	1 and 5	1. 5
V2	4. 45	57 μv	1 and 5	1. 5
V2	5. 45	29 μv	1 and 5	1. 5
V2 RT–66/GRC	20. 0	103 μv	1 and 5	1. 5
V2 RT–66/GRC	27. 0	140 μv	1 and 5	1. 5
V1 RT–66/GRC	20. 0	5 μv	1 and 5	1. 5
V1 RT–66/GRC	27. 0	4 μv	1 and 5	1. 5
ANT RT–66/GRC	20. 0	.4 μv	1 and 5	1. 5
ANT RT–66/GRC	27. 0	.3 μv	1 and 5	1. 5
V2 RT–67/GRC	27. 0	103 μv	1 and 5	1. 5
V2 RT–67/GRC	38. 0	140 μv	1 and 5	1. 5
V1 RT–67/GRC	27. 0	5 μv	1 and 5	1. 5
V1 RT–67/GRC	38. 0	4 μv	1 and 5	1. 5
ANT RT–67/GRC	27. 0	.4 μv	1 and 5	1. 5
ANT RT–67/GRC	38. 0	.3 μv	1 and 5	1. 5
V2 RT–68/GRC	38. 0	103 μv	1 and 5	1. 5
V2 RT–68/GRC	54. 0	140 μv	1 and 5	1. 5
V1 RT–68/GRC	38. 0	8 μv	1 and 5	1. 5
V1 RT–68/GRC	54. 0	6 μv	1 and 5	1. 5
ANT RT–68/GRC	38. 0	.7 μv	1 and 5	1. 5
ANT RT–68/GRC	54. 0	.5 μv	1 and 5	1. 5

f. Analysis. Compare the signal generator output levels required to give the reference readings with the levels given in the chart. The tabulated data are nominal values. Nonuniformity in tubes, tolerances of components, etc., may be responsible for as much as 10 percent reading variations between sets. Interpret the test results with this fact in mind. In general, the fault in the circuit group lies between the point at which the abnormal reading is first obtained and the preceding test point. A fault may be indicated by the ab-

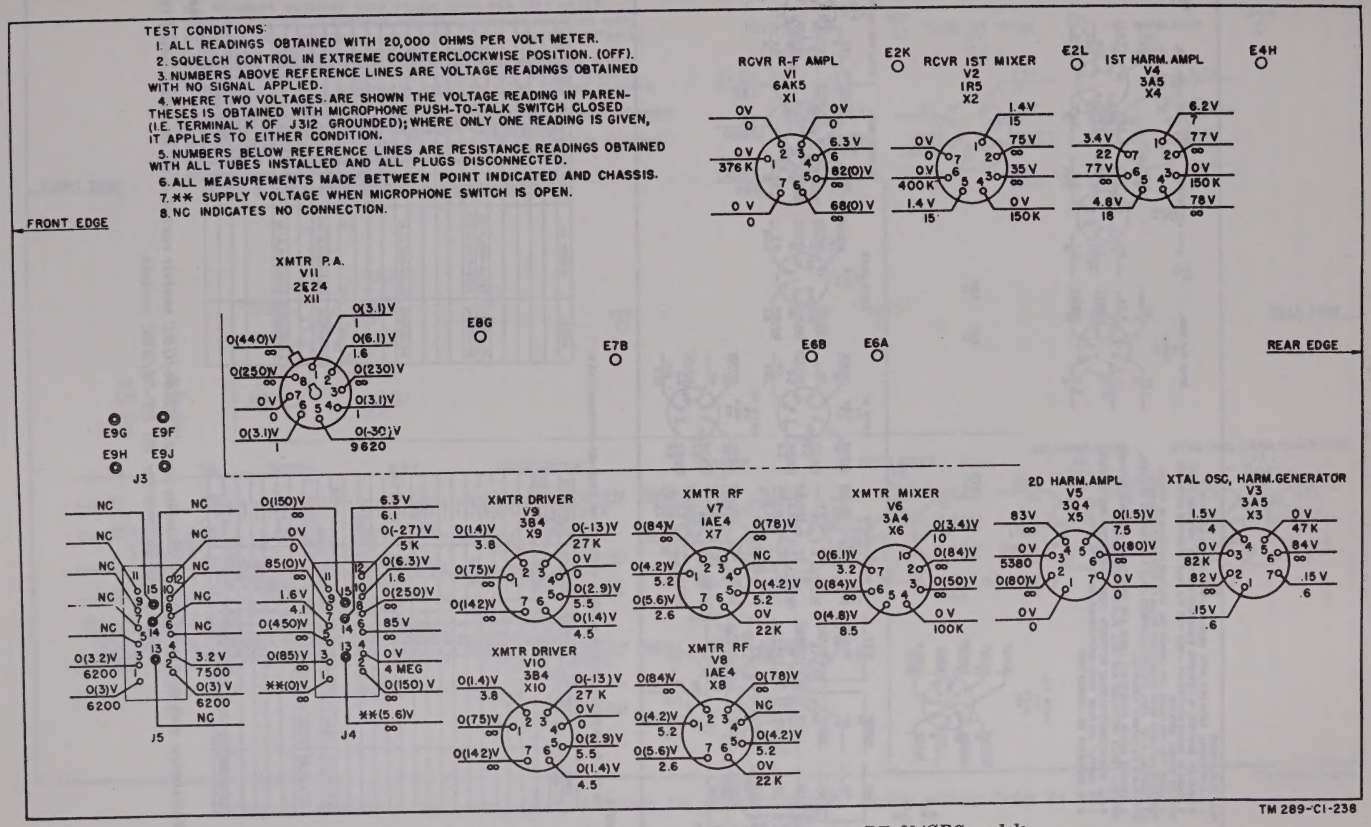
TEST CONDITIONS:
1. ALL READINGS OBTAINED WITH 20,000 OHMS PER VOLT METER.
2. SQUELCH CONTROL IN EXTREME COUNTERCLOCKWISE POSITION. (OFF).
3. NUMBERS ABOVE REFERENCE LINES ARE VOLTAGE READINGS OBTAINED WITH NO SIGNAL APPLIED.
4. WHERE TWO VOLTAGES ARE SHOWN THE VOLTAGE READING IN PARENTHESES IS OBTAINED WITH MICROPHONE PUSH-TO-TALK SWITCH CLOSED (I.E. TERMINAL K OF J312 GROUNDED); WHERE ONLY ONE READING IS GIVEN, IT APPLIES TO EITHER CONDITION.
5. NUMBERS BELOW REFERENCE LINES ARE RESISTANCE READINGS OBTAINED WITH ALL TUBES INSTALLED AND ALL PLUGS DISCONNECTED.
6. ALL MEASUREMENTS MADE BETWEEN POINT INDICATED AND CHASSIS.
7. ** SUPPLY VOLTAGE WHEN MICROPHONE SWITCH IS OPEN.
8. NC INDICATES NO CONNECTION.
RCVR R-F AMPL V1 6AK5 X1
RCVR 1ST MIXER V2 1R5 X2
1ST HARM. AMPL V4 3A5 X4
E2K
E2L
E4H
FRONT EDGE
REAR EDGE
XMTR P.A. V11 2E24 X12
E8G
E7B
E6B
E6A
E9G
E9F
E9H
E9J
J3
J5
J4
XMTR DRIVER V9 3B4 X9
XMTR DRIVER V10 3B4 X10
XMTR RF V7 1AE4 X7
XMTR RF V8 1AE4 X8
XMTR MIXER V6 3A4 X6
2D HARM. AMPL V5 3Q4 X5
XTAL OSC, HARM. GENERATOR V3 3A5 X3
TM 289-CI-238

Figure 65. Resistance and voltage data, r-f chassis, for all RT-68/GRC models.

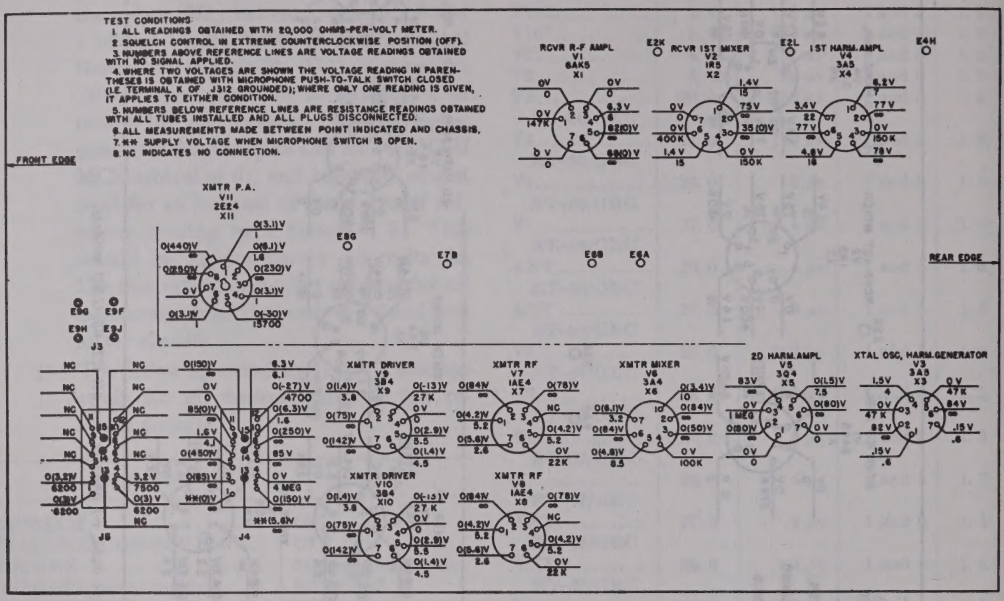
TEST CONDITIONS
1. ALL READINGS OBTAINED WITH 20,000 OHMS-PER-VOLT METER.
2. SQUELCH CONTROL IN EXTREME COUNTERCLOCKWISE POSITION (OFF).
3. NUMBERS ABOVE REFERENCE LINES ARE VOLTAGE READINGS OBTAINED WITH NO SIGNAL APPLIED.
4. WHERE TWO VOLTAGES ARE SHOWN THE VOLTAGE READING IN PARENTHESES IS OBTAINED WITH MICROPHONE PUSH-TO-TALK SWITCH CLOSED (I.E. TERMINAL K OF J312 GROUNDED); WHERE ONLY ONE READING IS GIVEN, IT APPLIES TO EITHER CONDITION.
5. NUMBERS BELOW REFERENCE LINES ARE RESISTANCE READINGS OBTAINED WITH ALL TUBES INSTALLED AND ALL PLUGS DISCONNECTED.
6. ALL MEASUREMENTS MADE BETWEEN POINT INDICATED AND CHASSIS.
7. ## SUPPLY VOLTAGE WHEN MICROPHONE SWITCH IS OPEN.
8. NC INDICATES NO CONNECTION.
FRONT EDGE
REAR EDGE
RCVR R-F AMPL V1 6AK5 X1
RCVR 1ST MIXER V2 1R5 X2
1ST HARM. AMPL V4 3A5 X4
XMTR P.A. V11 2E24 X12
XMTR DRIVER V9 3B4 X9
XMTR DRIVER V10 3B4 X10
XMTR RF V7 1AE4 X7
XMTR RF V8 1AE4 X8
XMTR MIXER V6 3A4 X6
2D HARM. AMPL V5 3A4 X5
XTAL OSC. HARM. GENERATOR V3 3A5 X3
E2K
E2L
E4H
E8G
E7B
E6B
E6A
E3G
E3F
E3H
E3J
J3
J8
J4

NOTE:
THE FOLLOWING DIFFERENCES IN READINGS EXIST IN THE RECEIVER-TRANSMITTERS:

MODEL	ORDER NO.	TUBE	PIN	VOLTAGE	RESISTANCE
RT-66/GRC	1789-PHILA-51	V1	1	—	100K
		V1	6	57(0)	—
		V2	3	35	—
		V6	3	0(70)	—
		V6	4	5.6	—
		V7	1	9	—
		V7	3	0(84)	—
		V7	1	10	—
		V7	7	10	—
		V8	5	10	—
		V8	7	10	—
		V9	1	0(125)	—
		V9	3	0(-20)	35K
		V11	3	0(206)	—
		V11	5	—	20K
		V11	8	0	—
		J4	4	—	1.5 MEG
RT-66/GRC	18651-PHILA-49	V1	6	35(0)	—
		V11	9	0(-30)	7680
RT-66/GRC	21434-PHILA-50	V1	1	—	147K
		V9	3	0(-19)	—
		V9	7	0(125)	—
		V10	3	0(-19)	—
		V10	7	0(125)	—
		V11	3	0(200)	—
RT-66/GRC	32137-PHILA-51	V1	1	—	139K

MODEL	ORDER NO.	TUBE	PIN	VOLTAGE	RESISTANCE
		V9	3	0(-19)	—
		V9	7	0(125)	—
		V10	3	0(-19)	—
		V10	7	0(125)	—
		V11	3	0(200)	—
RT-66/GRC	32138-PHILA-51	V11	5	0(-30)	4680
RT-67/GRC	1759-PHILA-51	V2	3	38	—
		V3	3	—	82K
		V7	6	0(4.3)	—
		V8	6	0(4.3)	—
		V11	5	0(-30)	9180
RT-67/GRC	16831-PHILA-51	V1	6	98(0)	—
		V3	3	—	75K
		V3	5	—	75K
		V7	6	0(3.8)	—
		V8	6	0(3.8)	—
		V11	8	0	—
RT-67/GRC	18651-PHILA-49	V7	6	0(4.3)	—
		V8	6	0(4.3)	—
		V11	5	—	7680
RT-67/GRC	32111-PHILA-51	V1	6	98(0)	—
		V2	3	LATE MODEL 38	—
		V3	3,5	—	75K
		V7	6	0(3.8)	—
		V11	9	—	9180

TM 280-CI-239

Figure 66. Resistance and voltage data, r-f chassis, for all RT-66/GRC models except early models bearing Order No. 18651-Phila-49, and for all RT-76/GRC models.

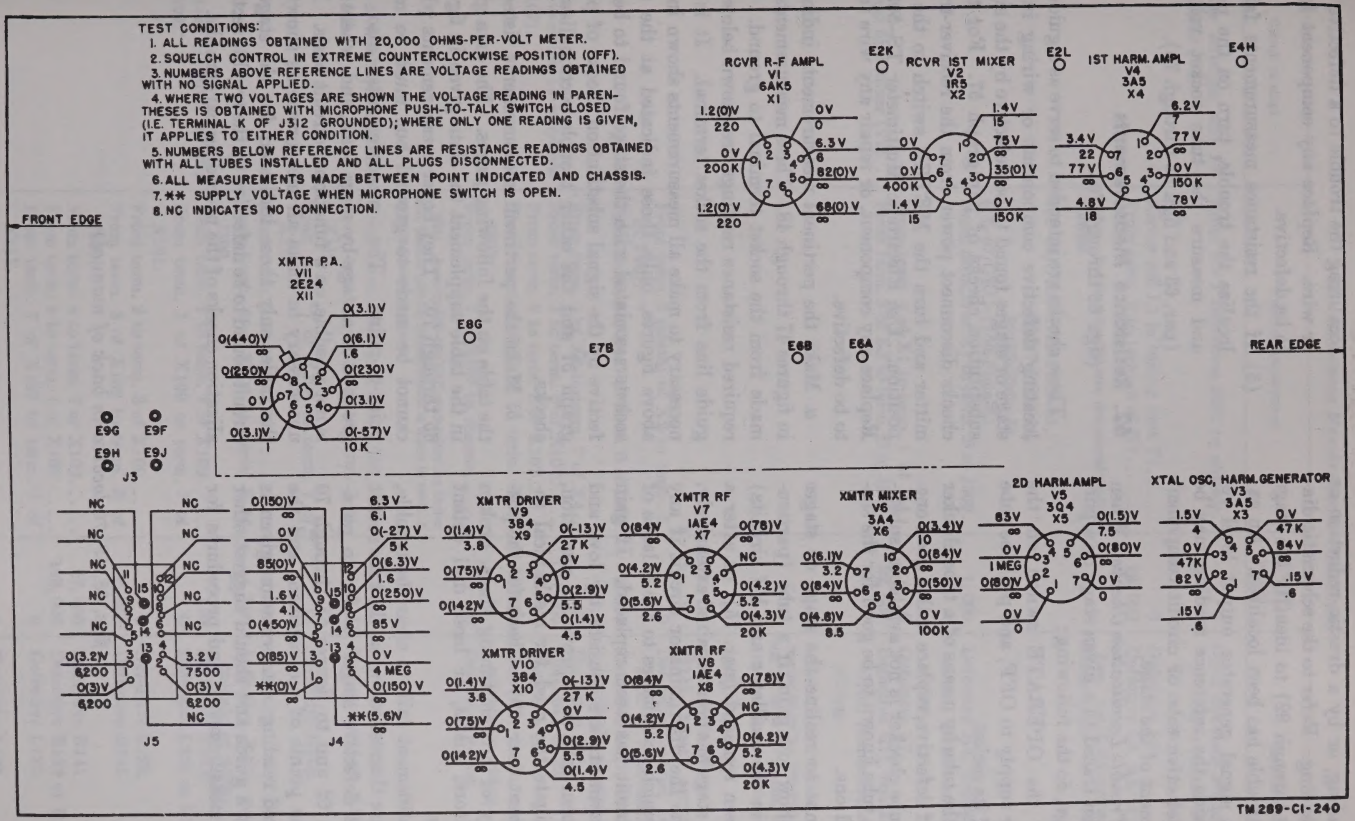
TEST CONDITIONS:
1. ALL READINGS OBTAINED WITH 20,000 OHMS-PER-VOLT METER.
2. SQUELCH CONTROL IN EXTREME COUNTERCLOCKWISE POSITION (OFF).
3. NUMBERS ABOVE REFERENCE LINES ARE VOLTAGE READINGS OBTAINED WITH NO SIGNAL APPLIED.
4. WHERE TWO VOLTAGES ARE SHOWN THE VOLTAGE READING IN PARENTHESES IS OBTAINED WITH MICROPHONE PUSH-TO-TALK SWITCH CLOSED (I.E. TERMINAL K OF J312 GROUNDED); WHERE ONLY ONE READING IS GIVEN, IT APPLIES TO EITHER CONDITION.
5. NUMBERS BELOW REFERENCE LINES ARE RESISTANCE READINGS OBTAINED WITH ALL TUBES INSTALLED AND ALL PLUGS DISCONNECTED.
6. ALL MEASUREMENTS MADE BETWEEN POINT INDICATED AND CHASSIS.
7. ** SUPPLY VOLTAGE WHEN MICROPHONE SWITCH IS OPEN.
8. NC INDICATES NO CONNECTION.
FRONT EDGE
REAR EDGE
RCVR R-F AMPL V1 6AK5 X1
RCVR IST MIXER V2 1R5 X2
IST HARM. AMPL V4 3A5 X4
XMTR P.A. V11 2E24 X12
XMTR DRIVER V9 3B4 X9
XMTR DRIVER V10 3B4 X10
XMTR RF V7 1AE4 X7
XMTR RF V8 1AE4 X8
XMTR MIXER V6 3A4 X6
2D HARM.AMPL V5 3Q4 X5
XTAL OSC, HARM.GENERATOR V3 3A5 X3
E2K
E2L
E4H
E8G
E7B
E6B
E6A
E9G
E9F
E9H
E9J
J3
J5
J4
TM 289-CI-240

Figure 67. Resistance and voltage data, r-f chassis, for early RT-66/GRC models bearing Order No. 18651-Phila-49.

sence of a reading, or by a drastic reduction or increase in a reading. Refer to the schematic diagram (figs. 79 through 82) to identify the stage to which the trouble has been localized. An excessively high signal generator output level required to provide the reference reading may be caused by a defective tube or circuit component or to misalinement of the stage.

g. Further Trouble Localization Checks. When trouble has been traced to a given stage or a portion of the stage, do the following:

(1) Turn the OPERATE switch on the power supply to OFF, and pull the tube out of its socket.

(2) Test the tube by means of a tube checker and, if defective, replace with a good one. If a tube checker is not available, substitute a tube known to be good for the suspected one.

(3) Attempt to realine the stage or stages that show low gain, if a tube (particularly in the oscillator and h-f circuits) has been replaced (par. 75), or after a tuned stage has been repaired extensively. Realine the discriminator circuit if any part which contributes to the balance of the circuit has been replaced. If gain measurements are consistently low, and alinement fails to improve the condition, investigate the need for mechanical realinement (par. 69). Check for the possibility of broken tuning slugs, broken capacitors, shafts, or loose dial detent screws.

(4) If realinement fails to clear the trouble, measure the resistances at the tube socket of the defective stage. Refer to paragraph 62 and to figures 65 through 70 for the points of measurement and the required reading. Information given is merely a guide and should suggest other tests, measurements, and procedures for localizing the trouble to a defective part or wire. Replace any component found to be defective.

(5) If the resistance measurements fail to localize the trouble, turn on the power and measure the tube socket voltages (par. 63 and figs. 65 through 70).

62. Resistance Measurements
(figs. 65 through 70)

These checks are intended to serve as a guide for locating defective components or wiring in the stage or stages found to be defective by the signal substitution checks of paragraph 57. For these checks disconnect power from the receiver-transmitter and turn the METER switch to the RF position. Use Electronic Multimeter TS–505/U. Replace any component, or repair any wire found to be defective.

a. Make the pertinent measurements indicated in figures 47 through 48. These measurements are made from the socket terminal to ground. The required resistance readings are shown below the guide line from the socket terminal. It is not necessary to make all measurements shown in the above figures, only those indicated at the tube sockets associated with the stage found to be defective by the signal substitution checks of paragraph 57 and the other trouble sectionalization checks.

b. Make the pertinent measurements listed in the table on the following pages. The data given in the table supplement the data given in figures 65 through 70. They cover measurements which cannot be made to ground but must be made point-to-point. The measurements also are grouped on a stage-by-stage basis, and, where this is not possible, on a functional circuit basis. It is unnecessary to make all measurements shown in the table, only those indicated for the stage or circuit found to be defective by the trouble sectionalization checks of the preceding paragraphs.

(*figs. 68, 69, 70 located in back of manual*)

Circuit or stage	Point of measurement	Normal reading (ohms)	Probable trouble
Receiver antenna and r-f amplifier (V1).	From ANT connector J307 to chassis	0	Open contacts 3 and 4 of relay O1. Defective coaxial connector J306 or P6 or coaxial cable.
	Across coil L1 in tuning unit T1	0	Defective L1.
	From term. 5 to term. 6 of X1	16, 000	Defective L3, R4, or R3.
	Note. For the following sets, the normal reading is 100,000:		*Note.* For all RT–66/GRC models, L2 is substituted for L3.
	RT–66/GRC–1759-Phila-51, 32137-Phila-51, 32138-Phila-51. RT–67/GRC–1759-Phila-51.		
	From term. 5 of X1 to term. B of J309	1, 000	Defective R4, contacts 9–10 of relay O101, multiconnector terminals, or wiring.
	From term. 4 of X1 to term. 1 of X4	0	Defective L7.
Receiver first mixer (V2)	From term. 3 of X2 to term. B of J309	22, 000	Defective R11, contacts 9–10 of relay O101, multiconnector terminals, or wiring.
			Note. In all RT–66/GRC models except those bearing Order No. 1759-Phila-51, and in the following RT–67/GRC models, contacts 9–10 of relay O101 also is a probable trouble: 16831-Phila-51, 18651-Phila-49, 32111-Phila-51, serial No. 1–13671.
	From term. 2 (plate) of X2 to term. 5 of T107.	0	Defective coaxial connector P1 or J101 or interchassis coaxial cable.
	From term. 5 of T107 to term. B of J309	8, 200	Defective L117, R133, multiconnector terminals, or wiring.
	From term. 1 of X2 to term. 7 of X4	33	Defective R10.
First variable i-f amplifier (V107).	From term. 1 to term. 6 of X107	180, 000	Defective R132.
	From term. 2 to term. 3 of X107	0	Defective L118.
	From term. 3 of X107 to term. B of J309.	12, 000	Defective R136, multiconnector terminals, or wiring.
	From term. 7 of X107 to chassis	0	Defective wiring.
	Note. In early RT–66/GRC models bearing Order No. 18651-Phila-49, measurement is made to term. 1 of X102 instead of chassis.		
Second variable i-f amplifier (V108).	From term. 6 to term. 1 of X108	180, 000	Defective R135.
	From term. 1 of X108 to term. 7 of X110.	5	Defective R148, R149, or L125.
	From term. 7 of X108 to term. 7 of X115.	12	Defective R176.
	From term. 2 to 3 of X108	16, 700	Defective L119, L121, R137, or R138.
	From term. 3 of X108 to term. B of J309.	4, 700	Defective R137, multiconnector terminals, or wiring.
Receiver second mixer (V109).	From term. 1 to term. 7 of X109	150	Defective R143.
	From term. 1 of X109 to term. 7 of X101.	0	Defective L105 or L106.
	From term. 2 to term. 3 of X109	0	Defective L123.
	From term. 3 of X109 to term. B of J309.	8, 200	Defective R145.
	From term. 4 to term. 1 of X109	27, 000	Defective R141.
	From term. 6 to term. 1 of X109	198, 000	Defective R139 or R140.
	From term. 7 of X109 to term. 1 of X115.	0	Defective L122.
	From term. 4 of T109 to chassis	0	Defective L120.

Circuit or stage	Point of measurement	Normal reading (ohms)	Probable trouble
First fixed i-f amplifier (V110).	From term. 1 to term. 6 of X110	198, 000	Defective R146 or R147.
	Note. For the following sets, the normal reading is 172,000:		*Note.* For the sets listed in *Point of measurement* column R113 and R182 are also probable troubles.
	RT–66/GRC–1759-Phila-51, 21434-Phila-510, and 32137-Phila-51.		
	From term. 2 to term. 3 of X110	0	Defective L126.
	From term. 3 of X110 to term. B of J309.	8, 200	Defective R152, multiconnector terminals, or wiring.
	Note. For the following sets, the normal reading is 150,000:		
	RT–67/GRC–1759-Phila-51-all, 32111-Phila-51–13672 & up.		
	RT–68/GRC–1759-Phila-51-all, 16817-Phila-51-9, 676 & up, 16821-Phila-51-16, 668 & up, 32114-Phila-51-all, 32127-Phila-51-all.		
	From term. 7 of X110 to term. 1 of X108.	5	Defective L125, R148, or R149.
	From term. 1 of X110 to term. 7 of X111.	0	Defective L128.
First limiter stage (V111)	From term. 1 to term. 6 of X111	198, 000	Defective R153 or R154.
	From term. 2 to term. 3 of X111	0	Defective L129.
	From term. 3 of X111 to term. B of J309.	8, 200	Defective R156, multiconnector terminals, or wiring.
	From term. 1 of X111 to term. 7 of X112.	0	Defective L131.
	From term. 6 of X111 to term. 1 of X1	2 meg	Defective R180 and R55.
	Note. The above measurement applies only to RT-67/GRC and RT-68/GRC models.		
Second limiter stage(V112)	From term. 2 to term. 3 of X112	0	Defective L132.
	From term. 3 of X112 to term. B of J309.	1, 000	Defective R160, multiconnector terminals, or wiring.
Discriminator circuit (V113 and V114).	From term. 2 of X113 to term. 2 of X114.	0	Defective L133 or L134.
	From term. 2 to term. 3 of X113	180, 000	Defective R164.
	From term. 2 to term. 3 of X114	180, 000	Defective R165.
	From term. 2 of X113 to term. 4 of T113.	0	Defective L133.
	From term. 2 of X114 to term. 4 of T113.	0	Defective L134.
	From term. 1 of X113 to term. 7 of X114.	0	Defective wiring.
	From term. 1 of X114 to term. 7 of X113.	41	Defective R162 or R161, R304 (or dial light), or contacts 10–11–12 of DIAL LIGHT OFF-ON-RING switch S302.
	From term. 1 of X114 to term. 7 of X116.	0	Defective L136.
	From term. 7 of X113 to term. 4 of X3	0	Defective L135 or L5.
Afc circuit	From term. 3 of X113 to term. 6 of X105.	650, 000	Defective R170 or R116.
	From term. 3 of X114 to term. 6 of X106.	650, 000	Defective R171 or R118.

Circuit or stage	Point of measurement	Normal reading (ohms)	Probable trouble
First audio amplifier (V115)	Across R175	270, 000	Defective R175.
	From pin 11 of P307 to chassis	500, 000	Defective R303.
	From pin 8 of P307 to chassis. (VOLUME control in maximum counterclockwise position.)	500, 000	Defective R303.
	From term. 3 of X115 to chassis	1.61 meg	Defective contacts 1–2 of relay O101, R173, R174, R109, R110, R55, or R54.
	Note. For RT-66/GRC sets, the normal reading is 1.38 meg.		
	From term. 2 to term. 4 of X115	1, 500	Defective T114.
	From term. 4 of X115 to term. H of J312.	0	Defective wiring or multiconnector pins.
	From term. 7 of X115 to term. 7 of X102.	22	Defective R176 or R107.
	From term. 7 of X115 to term. 4 of X116.	12	Defective R176.
	From term. A of J311 to chassis	24	Defective T114.
Power audio amplifier (V116).	From term. 3 to term. 5 of X116	600	Defective T114.
	From term. 3 to term. 5 of X116	600	Defective T114.
	From term. 5 to term. 1 of X116	280	Defective T114.
	From term. 1 to term. 7 of X116	0	Defective wiring.
	From term. 4 of V116 to term. L of J309	0	Defective wiring or multiconnector pins.
	From term. 2 to term. 6 of X116	570	Defective T115.
	From term. 6 of X116 to term. M of J309.	285	Defective T115, multiconnector pins, or wiring.
	From term. L of J311 to chassis	24	Defective T115, multiconnector pins, or wiring.
Retransmit audio amplifier (V102).	From term. 2 to term. 4 of X102	1, 500	Defective T102.
	From term. 4 of X102 to term. B of J309.	100	Defective R177, connector pins, or wiring.
	From term. 4 of X102 to term. J of J312	0	Defective connector pins or wiring.
	From term. B of J312 to chassis	24	Defective R108 or T102.
	Across R106	680, 000	Defective R106.
Receiver oscillator (V101)	From term. 2 to term. 3 of X101	0	Wiring defective.
	From term. 1 to term. 7 of X101	150	Defective R102.
	From term. 2 of X101 to term. B of J309.	50	Defective L101, L103, or L104.
Crystal oscillator-harmonic generator (V3).	From term. 1 to term. 7 of X3	0	Defective wiring.
	From term. 4 to term. 7 of X3	150	Defective R14.
	From term. 3 to term. 5 of X3	0	Defective wiring.
	From term. 2 to term. 6 of X3	2, 000	Defective R12, R15, or L6.
	From term. 2 of X3 to term. B of J309	1, 000	Defective R12, connector pins, or wiring.
First harmonic amplifier (V4).	From term. 2 to term. 4 of X4	5, 700 to 5, 850	Defective R20, L8, R22, or R21.
			Note. R20 varies in value from 0 to 150 ohms for Receiver-Transmitters RT-66/GRC, RT-67/GRC and RT-66/GRC (fig. 16).
	From term. 4 of X4 to term. B of J309	4, 700	Defective R21, connector pins, or wiring.
	From term. 2 of X4 to term. 3 of T4	150 or 68 or 0	Defective R20 (value depends on receiver-transmitter involved) (fig. 16).

Circuit or stage	Point of measurement	Normal reading (ohms)	Probable trouble
Microphone input and reactance modulator (V105 and V106).	From term. C of J310 to term. 7 of X106 (S302 in OFF position).	15	Defective S302 contacts, winding terminal 6–7 of T106, or L137.
	Same as above (S302 in Ring position)	Infinity	Defective S302 contacts.
	Between term. 1 and 3 of T106	2,000	Defective T106 winding.
	Between term. 1 of T106 and chassis	1,000	Defective T106 winding.
	From term. 2 of X105 to term. 2 of X106.	0	Defective wiring.
	From term. 2 of X105 to term. 2 of T104.	18,000	Defective R115.
	From term. 3 of X105 to term 3 of X106.	9,400	Defective R119 or R120.
	From term. 3 of X105 to term. 8 of relay O101.	4,700	Defective R119.
	From term. 4 of X105 to term. 4 of X106.	40	Defective L114 or L115.
	From term. 5 to term. 7 of X106	22	Defective R123.
	From term. 7 of X106 to term. 7 of X105.	0	Defective wiring.
	From term. 5 of X106 to term. 1 of X104.	19	Defective R124 or L116.
	From term. 7 of X105 to term. 4 of relay O101.	0	Defective wiring.
Transmitter oscillator (V104A).	From term. 6 of X104 to term. 2 of T104.	18,000	Defective R115.
	From term. 6 of X104 to term. 8 of relay O101.	0	Defective L109 or L111.
	From term. 2 of T103 to chassis	0	Defective L110.
	From junction of C130 and L113 and L112 to chassis.	0	Defective L113 or L112.
Ringer circuit (V104B)	From term. 2 of X104 to term. 8 of relay O101 (S302 in RING position).	30	Defective T105, contacts of S302, connector pins, or wiring.
	Note. For RT-66/GRC sets bearing Order No. 18651-Phila-49, normal reading is 36,000.		*Note.* For the sets listed in *Point of measurement* column R129 is also a probable trouble.
	Same as above (S302 in OFF position)	Infinity	Defective contacts of S302.
	Across winding 1–2 of T105	550	Defective T105.
	Across winding 3–4 of T105	30	Defective T105.
	Across winding 5–6 of T105 (S302 in OFF position).	55	Defective T105 or S302 contacts.
	Same as above (S302 in RING position).	43	Defective contacts of S302, T105, or T106.
	From term. 3 of X104 to chassis	235,000 to 356,000	Defective R126, R127, or R128.
	Note. The above measurement is used for RT-67/GRC and RT-68/GRC sets only. The normal reading depends on the setting of R128.		
Second harmonic amplifier (V5).	From term. 6 of T5 to chassis	680	Defective R37.
	From term. 2 of X5 to term. 3 of T5	0, 100, or 150	Defective R24.
	Note. The normal readings are for RT-68/GRC, RT-67/GRC, and RT-66/GRC sets, respectively.		
	From term. 3 of T5 to term. 4 of X5	0	Defective L9.
	From term. 4 of X5 to term. B of J309 (relay O101 unoperated).	Infinity	Defective relay O101 contacts.
	From term. 4 of X5 to test point E6B	470	Defective R26.
	From term. 5 of X5 to term. 1 of X6	20	Defective R25.

Circuit or stage	Point of measurement	Normal reading (ohms)	Probable trouble
Transmitter mixer (V6)	From term. 2 to term. 3 of X6	41, 420	Defective L12, R31, R30, or R29.
	From term. 3 of X6 to stand-off insulator 7F.	58, 200	Defective R29 or R30.
	Note. For RT–66/GRC and RT–67/GRC models, the normal reading is 41,200.		*Note.* For RT–68/GRC sets bearing Order No. 18651-Phila-49, R29 is not used.
	From term. 4 of X6 to tie-point 7C	100, 000	Defective R27.
	Note. The above measurement is used for RT–66/GRC and RT–67/GRC models only.		
	From tie-point 7C to chassis	1, 500	Defective R37 or R38.
	From term. 4 of V6 to junction of J102 and C122.	0	Defective interchassis coaxial cable or connectors P2 or J102.
	From term. 7 of X6 to term. 7 of X8	4	Defective L11 or L13.
Transmitter r-f amplifier (V7 and V8).	From term. 2 of X7 to term. 2 of X8	0	Defective wiring.
	From term. 2 of X7 to term. 3 of X8	690	Defective L16, R43, or R36.
	From term. 3 of X8 to term. 3 of X106	5, 170	Defective R36, R120, multiconnector pins, or wiring.
	From term. 6 to term. 7 of X7	22, 000	Defective R32.
	Note. For RT–66/GRC sets, the above measurement is made to chassis.		
	From term. 6 to term. 7 of X8. (In RT–66/GRC, from term. 6 of X8 to chassis.)	22, 000	Defective R33.
	Note. For RT–66/GRC sets, the above measurement is made to chassis.		
	From term. 7 to term. 1 of X8	27	Defective R35.
	From term. 7 to term. 1 of X7	27	Defective R34.
	From term. 7 of X7 to term. 7 of X8	0	Defective wiring.
	From term. 1 of X7 to term. 5 of X9	7	Defective L14.
	Note. For all RT–68/GRC sets, and for following RT–66/GRC and RT–67/GRC sets, normal reading is 10.		*Note.* For sets listed in column 2, L14 is replaced by R56.
	RT–66/GRC–1759-Phila-51, RT–67/GRC–1759-Phila-51, 32111-Phila-51.		
	From term. 1 of X8 to term. 5 of X10	7	Defective L15.
	Note. For sets listed above, normal reading is 10.		*Note.* For the sets listed in column 2 above L15 is replaced by R57.
	From term. 7 of X8 to term. 2 of X11	0	Defective L13.
			Note. For RT–66/GRC sets, L20 also is a probable trouble.
Transmitter driver (V9 and V10).	From term. 7 of X9 to term. 7 of X10	0	Defective wiring.
	From term. 7 of X9 to term. 1 of X10	18, 000	Defective R46, R49, or L18.
	Note. For the following RT–66/GRC sets, normal reading is 22,000; for other RT–66/GRC sets, normal reading is 2,400.		
	18657-Phila-49-all, 32138-Phila-51-serial No. 3800 and down.		
	From term. 3 of X9 to term. 3 of X10	0	Defective wiring.
	From stand-off insulator 8A to 8D	180	Defective L18 or R49.
	From term. 1 of X9 to term. 1 of X10	0	Defective wiring.
	From term. 1 of X10 to term. C of J309	Infinity	Defective contacts 6–7 of relay O1.
	Between test points E7B and E8G	6, 800	Defective R41 or test point terminal.
	From term. 3 of X10 to test point E8G	18, 000	Defective R42.
	From test point E7B to chassis	2, 180	Defective R37, R38, or R39.

Circuit or stage	Point of measurement	Normal reading (ohms)	Probable trouble
Transmitter power amplifier (V11).	From plate cap of V11 to test point E9H.	4	Defective L22 or L21.
	Between test points E9H and E9J	20	Defective R53 or test terminals.
	From test point E9J to term. P of J309	0	Defective wiring or multiconnector pins.
	From stand-off insulator 9M to chassis	0	Defective L23.
	From term. 3 of X11 to term. F of J309	Infinity	Defective contacts 4–5 of relay O1.
	From term. 5 of X11 to test point E9F	3, 300	Defective R51 or test terminal.
	Notes: 1. For the following RT-66/GRC models, normal reading is 1,800; for other RT-66/GRC sets, normal reading is 2,400. 1865-Phila-49, 32138-Phila-51. 2. For RT-68/GRC sets bearing Order No. 1759-Phila-51 and 18651-Phila-49 (early sets), normal reading is 10,000.		
	Between test points E9F and E9G	1, 000	Defective R50.
	From E9G to chassis	4, 880	Defective R40 through R37.
	From term. 2 of X11 to term. 7 of X106	0	Defective multiconnector pins or wiring. *Note.* For the following RT-66/GRC sets, L20 also is a probable trouble. 18651-Phila-49, 21434-Phila-50, 32137-Phila-51, serial No. 6,839 and down, 32138-Phila-51.
Test circuits:			
1. Test socket X200 (i-f chassis test points).	From term. 1 of X200 to chassis	0	Defective wiring.
	From term. 2 of X200 to term. 4 of T113.	1 meg	Defective R166.
	From term. 2 of X200 to term. 3 of X113 or X114.	1.18 meg	Defective R16, R164, or R165.
	From term. 3 of X200 to term. 1 of X111.	18, 000	Defective R154.
	From term. 4 of X200 to term. 1 of X109.	0	Defective wiring.
	From term. 5 of X200 to chassis	18, 000	Defective R158.
	From term. 6 of X200 to term. 3 of X114.	0	Defective wiring.
	From term. 7 of X200 to chassis	38, 000	Defective R168, R169, R164, R165, or R167.
	From term. 8 of X200 to term. 5 of X109.	18, 000	Defective R140.
2. R-f chassis test points.	From E2K to chassis	120, 000	Defective R6 or test terminal.
	From E2L to chassis	47, 000	Defective R8 or test terminal.
	From E4H to chassis	47, 000	Defective R17 or test terminal.
	From E6A to E6B	2, 200	Defective R30 or test terminal.
	From E7B to E8G	6, 800	Defective R41 or test terminal.
	From E9G to E9F	1, 000	Defective R50 or test terminal.
	From E9H to E9J	20	Defective R53 or test terminal.
3. METER switch and associated test circuits.	From (−) term. on meter to chassis	0	Defective wiring.
	From (+) term. on meter to term. B of J309 (METER switch in 90V position).	180, 000	Defective switch contact or R307.
	From (+) term. on meter to term. 7 of X109 (METER switch in position 11). *Note.* For the following RT-66/GRC sets, normal reading is 5,600.	6, 800	Defective switch contact, R142, multiconnector pins, or wiring.

Circuit or stage	Point of measurement	Normal reading (ohms)	Probable trouble
Test circuits—Continued			
3. METER switch and associated test circuits—Continued	1759-Phila-51, 2134-Phila-50, 32137-Phila-51.		
	From (+) term. on meter to term. 1 of X110 (METER switch in position 10).	6, 800	Defective switch contact, R150, multiconnector pins, or wiring.
	From (+) term. on meter to term. 1 of X102 (METER switch in position 9).	6, 800	Defective switch contact, R105, multiconnector pins, or wiring.
	From (+) term. on meter to term. 7 of X114 (METER switch in position 7).	7, 500	Defective switch contact, R163, multiconnector pins, or wiring.
	From (+) term. on meter to term. 1 of X105 (METER switch on position 6).	12, 000	Defective R121, switch contacts, connector pins, or wiring.
	From (+) term. on meter to term. 1 of X104 (METER switch in position 5).	6, 800	Defective R125, switch contacts, connector pins, or wiring.
	Note. For the following RT–66/GRC sets, normal reading is 5,600.		
	1759-Phila-51, 21434-Phila-50, 32137-Phila-51.		
	From (+) term. on meter to term. 1 of X6 (METER switch in position 4).	6, 200	Defective R28, switch connector pins, or wiring.
	From (+) term. on meter to term. 5 of X10 (METER switch in position 3).	6, 200	Defective R38, switch connector pins, or wiring.
	Note. For the following RT–66/GRC sets, normal reading is 5,100.		
	1759-Phila-51, 21434-Phila-50, 32137-Phila-51.		
	From (+) term. on meter to term. 5 of X9 (METER switch in position 2).	6, 200	Defective R47, switch connector pins, or wiring.
	Note. For the RT–66/GRC sets listed above, normal reading is 5,100.		
	From (+) term. on meter to chassis ((−) term. (ground) disconnected from meter and METER switch in RF position).	15, 800	Defective C304, R308, or R306.
	Note. Above measurement applies only to RT–67/GRC and RT–68/GRC sets. For RT–67/GRC sets, normal reading is 10,800.		
Control circuits	From term. F of J310 to term. A of J309 (multiconnectors P307 and P304 disconnected).	40	Defective coil of relay O301.
	From term. 13 of P304 to term. 6 of P307 (same as above).	0	Defective wiring.
	From term. 1 of P304 to term. F of J310 (same as above).	0	Defective wiring.
	From term. 13 of P304 to term. A of J309 (same as above).	0	Defective wiring.
	From term. 1 to term. 13 of J4	40	Defective coil of relay O1.
	From term. 1 to term. 6 of J107 (same as above).	40	Defective coil of relay O101.

Circuit or stage	Point of measurement	Normal reading (ohms)	Probable trouble
Control circuits—Continued	From J307 to J308	0	Defective contacts of relay O301.
	From term. F of J309 to term. 4 of O1	0	Defective wiring.
	Between terms. 4 and 5 of O1	Infinity	Defective contacts of O1.
	Between terms. 2 and 3 of O1	Infinity	Defective contacts of O1.
	Between terms. 6 and 7 of O1	Infinity	Defective contacts of O1.
	From term. C of J309 to term. 6 of O1	0	Defective wiring.
	From term. 7 of O1 to insulator 8D	0	Defective wiring.
	From term. 2 to term. 3 of O101	Infinity	Defective contacts of O101.
	From term. 8 to term. 9 of O101	Infinity	Defective wiring.
	From term. 9 of O101 to term. B of J309.	0	Defective wiring.
	From term. 9 to term. 10 of O101	0	Defective contacts of O101.
	From term. 7 of O101 to chassis	0	Defective wiring.
	From term. 4 to term. 5 of O101	Infinity	Defective contacts of O101.
	From term. 5 of O101 to term. N of J309.	0	Defective wiring.
	From term. 4 of O101 to term. 2 of X11	0	Defective wiring.
			Note. For the following RT-66/GRC sets, L20 also is a probable trouble.
			18651–Phila–49–all.
			21434–Phila–50–all.
			32137–Phila–51–serial No. 6839 and down.
			32138–Phila–51–all.

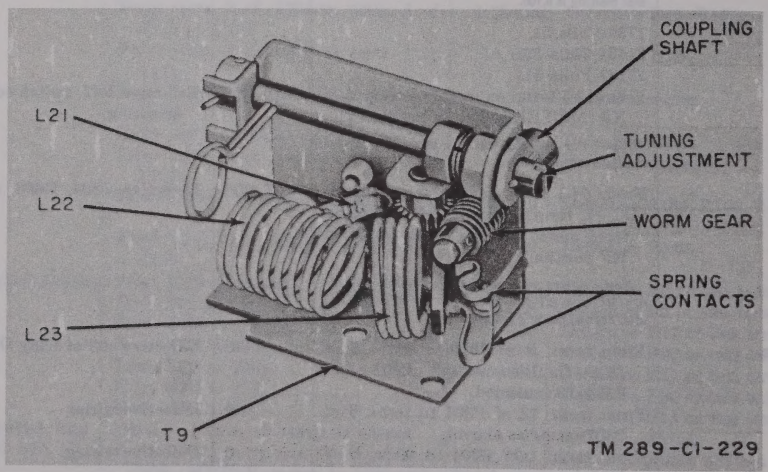

Figure 71. Transmitter antenna coupling assembly, for early models.

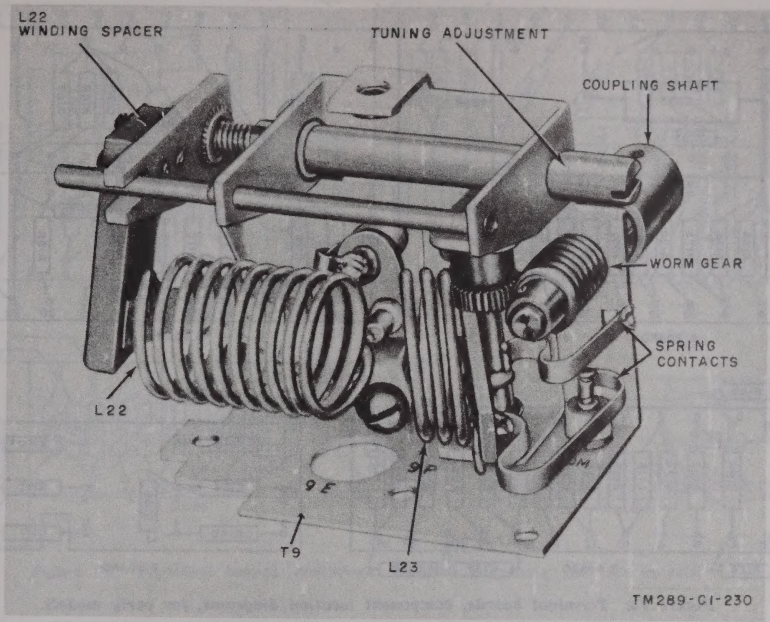

Figure 72. Transmitter antenna coupling assembly, for late models.

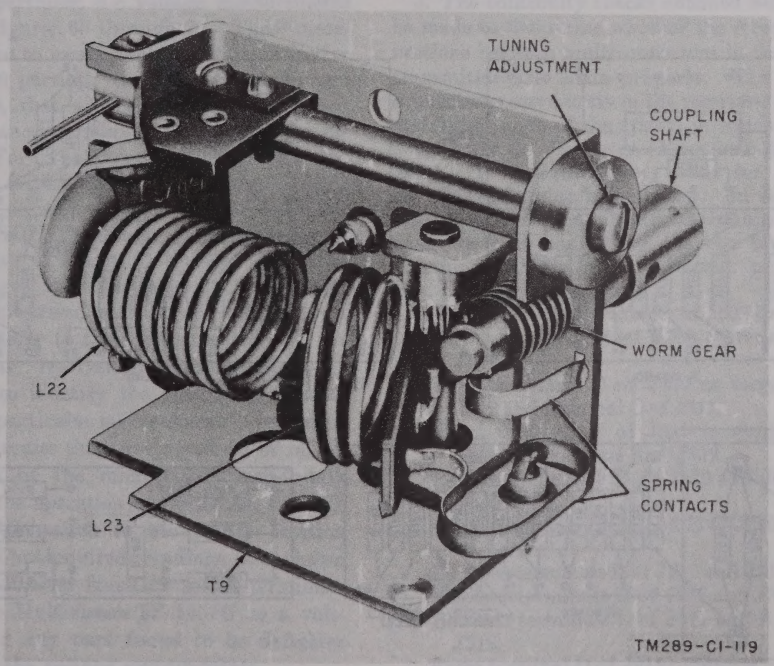

Figure 73. Transmitter antenna coupling assembly, for models bearing Order No. 21434-Phila-50.

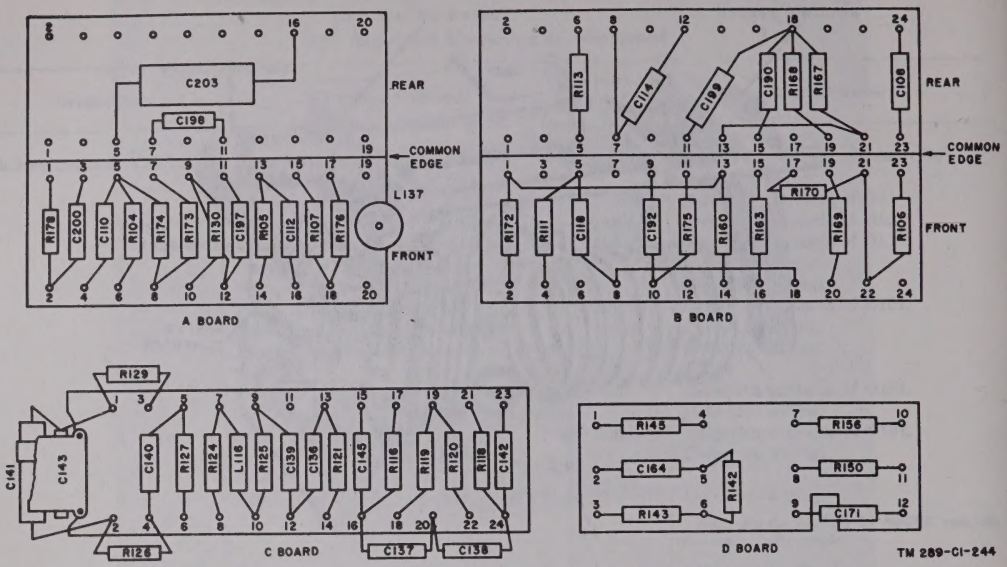

Figure 74. Terminal boards, component location diagrams, for early models.

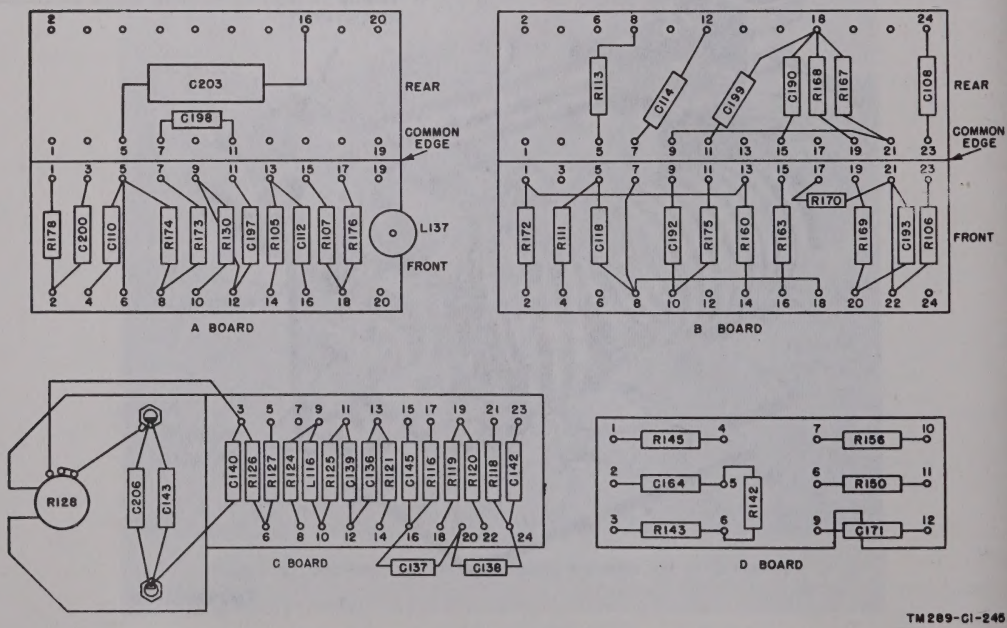

Figure 75. Terminal boards, component location diagrams, for later models.

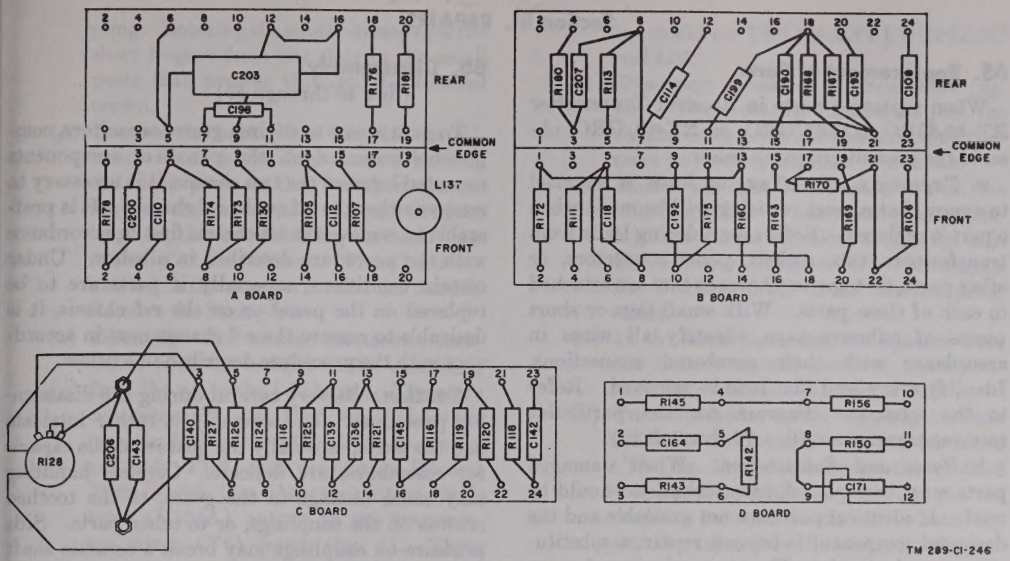

Figure 76. Terminal boards, component location diagrams, for late models.

63. D-C Voltage Measurements

Make the pertinent d-c voltage measurements indicated in figures 65 through 70. These measurements serve to locate faults, such as defective capacitors and partially shorted transformer and coil windings, that are not readily determined by the resistance measurements given in paragraph 62. For these measurements, turn the power supply OPERATE switch to the TRANS & RECEIVE position and the TRANS POWER switch to the HIGH position. All voltage measurements shown in figures 65 through 70, except filament voltages, are made to ground. Filament voltages are measured between the terminals of the socket. Refer to the schematic diagram for the particular receiver-transmitter (figs. 79 through 82) to identify the circuit components involved in a particular measurement. Note especially those circuits that are turned on or off by the operation of the microphone push-to-talk button or by the operation of the DIAL LIGHT ON-OFF-RING switch to the RING position (par. 41). The required readings are shown above the guide lines from the socket terminals. Use electronic Multimeter TS-505/U as a voltmeter. Repair any part found to be defective as a result of the voltage measurements.

64. Check of Interunit Strapping Connections

a. The continuity checks outlined below should be made to determine whether the strapping connections between multiconnectors in the receiver-transmitter are made properly. The strapping connections serve to tie in the receiver-transmitter with other units of the system in which it is used.

b. Using an ohmmeter (Electronic Multimeter TS-505/U or equivalent), check for continuity between the points listed below. In each case, a reading of zero ohm should be obtained. Otherwise, the wire connecting the two terminals in question is broken, or the connector pin is defective. Repair as necessary.

From terminals E and D of J309 to chassis.
From terminals J of J309 to terminal J of J312.
From terminal C of J310 to terminal C of J312 and terminal C of J311.
From terminal F of J310 to terminal F of J311 and terminal K of J312.
Between terminals A of J310 and J311 and E of J312.
From terminals H, B, and E of J310 and J311 to chassis.
Between terminals L of J310 and J311.
Between terminals H of J309 and J312.
Between terminals L of J311 and A and F of J312.
From terminal D of J312 to chassis.

65. Replacement of Parts

When replacing parts in Receiver-Transmitter RT–66/GRC, RT–67/GRC, or RT–68/GRC, observe the precautions given below.

a. Tagging Leads. Tagging leads is essential to assure that correct rewiring will be made when a part is replaced. Before unsoldering leads from transformers, tube sockets, panel connectors, or other parts, tie together the leads that are attached to each of these parts. With small tags or short pieces of adhesive tape, identify all wires in accordance with their numbered connections. Identify every lead that is to be removed. Refer to the schematic diagram for the particular receiver-transmitter (figs. 79 through 82).

b. Parts and Substitution. When damaged parts must be replaced, identical parts should be used. If identical parts are not available and the damaged component is beyond repair, a substitution must be made. The part substituted must have identical electrical properties and must be of equal or higher voltage and current rating.

c. Positioning of Part. Relocating a substituted part may develop certain difficulties, such as hum, noise, or crosstalk; therefore, it is not recommended.

d. Mounting. Mount the new or replaced part in the same mounting position as that formerly occupied by the damaged part. Fasten all mountings securely.

e. Soldering. Before soldering any connection, carefully scrape all parts that will be touched by the solder until all traces of rust, corrosion, paint, or varnish are removed. Dust the scraped parts with a small clean brush. Tin all parts to be soldered. Wrap the wire around the lug to be soldered so that it is mechanically secure. Solder the connections with very little solder and use sufficient heat to make the solder flow evenly around the tinned surfaces. Be sure the shields of coaxial cables or of other leads are soldered properly to the ground lug. Also check the soldering of the bonded connections between the metal subassembly frames and the chassis. Be sure the ground lug is bonded securely to the chassis.

f. Retropicalization. If the parts being replaced require a special treatment such as retropicalization, follow the instructions given in TB SIG 13 and TB SIG 72.

66. Disassembly

(figs. 40 through 59)

To gain access to wiring, gears, capacitors, components mounted on the panel, or components mounted between the two chassis, it is necessary to remove either the i-f or the r-f chassis. It is preferable to remove the i-f chassis first in accordance with the procedure described in *a* below. Under certain conditions, especially if parts are to be replaced on the panel or on the r-f chassis, it is desirable to remove the r-f chassis next in accordance with the procedure described in *b* below.

Caution: Be very careful during the disassembly procedure. The assembly is rather intricate and the parts, especially the gears and the capacitor assemblies, are delicate. Careless handling may cause damage to the gears, to the toothed crowns on the couplings, or to other parts. Side pressure on couplings may break a ceramic shaft on a gang capacitor.

a. Removal of I-F Chassis. To disengage the i-f chassis from the rest of the assembly, proceed as follows:

(1) Rotate the TENTH MCS and MCS controls (fig. 1) to their lowest frequency settings.

(2) Withdraw multiconnectors P306, P307, and P308 from J106, J107, and J108, respectively. These connectors, located on the i-f chassis near the panel, are used to join the panel-mounted components to the i-f chassis circuits (fig. 50). Pull at the handles in the direction perpendicular to the chassis. Be careful not to break any wires or to damage the connectors or any of the soldered parts.

(3) Disengage the toothed couplings that join the TENTH MCS control shaft, which extends into the interior of the set from the dial-drive assembly, to the gang capacitor shaft on the i-f chassis, as follows: Place the unit in its normal operating position. Using a screwdriver or similar convenient tool, rotate the long finger of the *spider* (fig. 11) as far as it will go. The spider is a flat washer with three long and three short fingers radiating out of its center. It is located between the bellows and the toothed crown of the cou-

pling. Rotating the spider disengages the short fingers from the slots in the small posts that project through the toothed crown.

(4) Remove the back plate (fig. 40) as follows: Remove the four screws holding the black plate to the T-shaped spacers between the two chassis. Loosen the four large captive bolts holding the back plate to the i-f and r-f chassis. These bolts are located in the rear corners of the chassis. Remove the back plate.

(5) Disengage the coaxial connectors associated with the coaxial cables extending from the r-f to the i-f chassis. These are connectors P1 and J101, which join the receiver first mixer plate (V2) to tuning assembly T107, and connectors P2 and J102, which join the transmitter oscillator (V104A) output to the transmitter mixer (V6) input (fig. 4). These connectors are mounted on small brackets at the rear of the i-f chassis.

(6) Remove the two large machine screws that hold the i-f chassis to the projections on the rear of the front panel.

(7) Spread the rear ends of the chassis slightly to remove the spacers.

(8) Very carefully lift the i-f chassis away from the rest of the assembly; be careful not to strip the gear teeth or to bend the chassis out of shape.

b. Removal of R-f Chassis. To disengage the r-f chassis from the panel, proceed as follows:

(1) Withdraw multiconnectors P304 and P305 from plugs J4 and J5, respectively (figs. 41 and 43), located on the r-f chassis near the panel. Pull at the handles in a direction perpendicular to the chassis.

(2) Loosen, but do not remove, the No. 6 screw (terminal 9) on the bracket that is mounted on the ceramic post, located on the r-f chassis below the transmitter antenna tuning capacitor (figs. 40 and 44). Withdraw the spade lug that is connected to a bear-covered wire which joins the antenna relay cantacts to the antenna circuit of the transmitter.

(3) Pull out the flexible shaft (fig. 4) from the coupling collar that is mounted on the shield for TRANS ANT COUPLING coil L23.

(4) Disengage connector P6 from J306 (fig. 40). These coaxial connectors join the coaxial cable from the antenna relay contacts to receiver antenna circuit L1.

(5) Loosen the two No. 6 setscrews on the coupling collar of the worm-gear assembly that varies capacitor C1A (fig. 43). Use a No. 6 Allen wrench. Disengage the flexible shaft from the coupling collar.

(6) If the back plate and the spacers have not been removed, perform the operations indicated in *a*(4) and (5) above.

(7) Turn the spider on the coupling between the MCS control and r-f gang capacitor C17 (fig. 11) to disengage the toothed couplings. Similarly, disengage the coupling between the dial-drive assembly and the crystal oscillator-harmonic generator ganged capacitor C1.

(8) Remove the two large machine screws holding the r-f chassis to the projections on the rear of the front panel.

(9) Lift off the r-f chassis; be careful not to cause any damage to the gears, couplings, or gang capacitor shafts.

67. Reassembling the Equipment

To reassemble the equipment, follow in reverse order the procedure for disassembling the unit (par. 66). The recommended order is to attach the r-f chassis to the front panel first. Then attach the i-f chassis to the panel. Reconnect all connectors and attach the spacers and the back plate. This procedure is outlined below.

a. R-F Chassis.

(1) Set the MCS dial at its lowest detent setting. Set the TENTH MCS dial at 0. Turn the TRANS ANT COUPLING control to the extreme clockwise position.

(2) Place the front panel face down. Line up the gears of the capacitor on the r-f chassis so that the red lines on the faces of the gears touch each other and form a straight line. This keys the gear assembly and the couplings to the coupling on the dial-drive assembly.

(3) Visually line up the chassis over the front panel and lower it in place so that the projections on the chassis fall to the right

of the projections from the rear of the front panel. Shift the chassis back and forth, a little at a time, until the toothed-crown couplings engage and the small studs on the toothed crown of the coupling attached to the dial-drive mechanism fit through the three holes in the corresponding crown of the coupling on the capacitor shaft. The studs on the toothed crown of the coupling on the dial-drive mechanism are keyed with the holes in the crown of the capacitor coupling so that they will fall in place in one position only. If necessary, shift the r-f chassis back and forth slightly to achieve proper alinement of the studs with the holes.

(4) Insert and tighten the two screws holding the front and the r-f chassis together. Slightly shift the r-f panel back and forth, as required, to take all bends out of the flexible coupling. Tighten the screws.

(5) Using a small screwdriver, finger, or other suitable means, turn the spider between the toothed crown and the bellows of the capacitor coupling so that the short fingers on the spider engage the slots on the studs from the crown on the dial-drive mechanism coupling.

(6) Reconnect the spade lug on the beaded lead from the antenna relay to the ceramic post (terminal 9) in the r-f chassis.

(7) Reinsert the shaft of the flexible coupling from the REC ANT TUNE control in the shaft of the worm-gear coupling. Tighten the two setscrews on the worm-gear coupling.

(8) Reconnect multiconnectors P305 and J5 and P304 and J4.

(9) Reinsert the flexible coupling from the TRANS ANT COUPLING control in the bushing associated with the transmitter coupling coil in T9. The shaft of the flexible coupling is slotted. See that the shaft falls into the bushing properly. If this cannot be done, rotate the flexible shaft slightly until movable antenna coil L23 is parallel with fixed tank coil L22 (figs. 71 through 73) and the slot engages the key inside the bushing.

b. I-F Chassis. Aline the gears on the i-f gang capacitor C101 so that the marks on the gear faces form a straight line. Drop the i-f chassis in place so that the projections from the shaft are on the left side of the projections from the rear of the panel. Be sure that the crown couplings on the capacitor shafts line up with the toothed-crown couplings from the dial-drive assembly. Turn the spider to engage the slots on the studs to lock the couplings together. Screw the chassis firmly to the back of the front panel. Reconnect the two coaxial cables, P1 and P2, from the r-f to the i-f chassis. Reconnect the three multiconnectors P306, P307, and P308.

c. Spacers and Back Plate. Slightly back off the screws which hold the i-f chassis to the front panel. Spread the rear ends of the two chassis enough to permit insertion of the T-shaped spacers. Be sure the tabs on the spacers fall in the slots on the r-f and i-f chassis. Before reattaching the back plate, reinsert the crystals in the crystal-holder assembly at the rear of the r-f chassis. A label in the cover for that assembly shows where the various crystals are to be plugged in. Place the back plate in position and insert and tighten the four screws holding the back plate to the spacers. Tighten the four large captive bolts located in the corners of the chassis. Reinsert all tubes; be sure the tubes are seated firmly in their sockets and that the ceramic plate cap of power amplifier tube V11 is connected. Replace all tube shields.

68. Special Repair Procedures

(figs. 40 through 59, 71 through 76)

Most of the parts in the receiver-transmitter are readily accessible and can be replaced without special instruction. Most of the small components, such as resistors, small capacitors, and small choke coils, are wired point to point directly to the lugs of sockets and terminals of tuning units. When replacing these parts, be careful not to damage adjacent components. Special procedures for repairing or replacing sockets, connectors, and some of the more complicated subassemblies, are given in *a* through *d* below. Since the unit is compact and many of the components are sandwiched between the i-f and r-f chassis, it will be necessary to disassemble the unit as described in paragraph 66 before the mechanical repair and replacement procedures can be followed. In many cases, disassembly of the unit before the part is replaced

will prevent damage to other parts. It is a matter of judgment to decide when it is necessary to disassemble the unit and when it is possible to do the replacement without disassembly.

a. Sockets. All tube sockets are attached to the chassis with rivets. To remove a socket, proceed as follows:

(1) Disassemble the particular chassis from the rest of the unit to prevent possible damage by the tools used in removing the part.
(2) Remove the tube shield and the tube that is plugged into the socket.
(3) Unsolder the wires connected to the socket.
(4) Drill out the two rivets fastening the socket to the chassis.
(5) Substitute a new socket and fasten it with machine screws, lockwashers, and nuts, or, if feasible, with rivets. Be sure that the socket is keyed the same way as the socket which was removed.
(6) Resolder the wires and components to the socket.
(7) Clean the chassis thoroughly to remove solder drops or metal chips.
(8) Check the new connections with those shown on the schematic diagram for the particular unit (figs. 79 through 82).

b. Stand-Off Insulators. Stand-off insulators are riveted to the chassis. To remove them, unsolder the leads attached to the insulators and drill out the rivets.

c. Panel Connectors. To remove panel connectors, it is necessary to disengage the panel from the rest of the panel and chassis assembly. A spanner wrench or a pair of long-nosed pliers is necessary. Proceed as follows:

(1) Disengage the panel from the panel and chassis assembly to gain access to the rear of the panel. Insert the teeth of the spanner wrench into the notches in the nut of the connector on the front panel. Turn the spanner wrench in a counterclockwise direction until the nut is removed. Remove the lockwasher.
(2) Unsolder all wires.
(3) Remove the connector from the rear of the panel.
(4) When selecting a new connector, be sure that the new part has a rubber gasket.
(5) Clean the connector and the wires thoroughly to remove solder drops.
(6) Resolder all wires to the new connector.
(7) Recheck the new connections with those shown in the schematic diagram for the particular unit (figs. 79 through 82).
(8) Reinsert the connector from the rear of the panel.
(9) Reinsert the lockwasher and the nut by using the spanner wrench.
(10) Screw the nut back onto the connector. Check the assembly for tightness.
(11) Reassemble the panel to the rest of the unit.

d. Replacement of R-F Coils. The r-f coils of both the transmitter and the receiver are located in the compartments of an assembly mounted on the wiring side of the r-f chassis. Proceed as follows:

(1) Disassemble the r-f chassis from the panel and chassis assembly as described in paragraph 66*b*. Place the r-f chassis wiring side up.
(2) Remove the machine screws holding the cover of the coil compartment in place. Remove the cover. The partition separating the r-f coils from each other is now exposed to view (figs. 44 and 47).
(3) Remove the six machine screws, nuts, and lockwashers holding the partition to the vertical frames of the r-f compartment. Three of the screws are located on one frame and three on the other.
(4) Remove the two machine screws, nuts, and lockwashers holding the partition to the chassis plate.
(5) Remove the partitions. The coils now are more accessible.
(6) To replace any one of the r-f coils, proceed as follows:
   (*a*) Unsolder the leads. Be careful not to damage the delicate coil windings.
   (*b*) Unscrew the large nut located on the outer side of the compartment frame. Be sure not to lose the small spring clip which grips the tuning slug to the nut. The clip insures that the tuning slug holds its adjustment.
   (*c*) Remove the coil.
   (*d*) Insert the replacement coil.
   (*e*) Resolder all connections and restore the nut and tuning slug assembly. Be sure

the spring clip is in place, otherwise the tuning slug will loosen and come out of adjustment easily.

(7) Coils L17 and L18, trimmer capacitors C66 and C68, and resistor R49 are mounted as an assembly on a bakelite board that, in turn, is mounted by two machine screws on the compartment frame. To remove this assembly, proceed as follows:

(*a*) Unsolder the leads from the two gang capacitor lugs.

(*b*) Remove the two machine screws, lockwashers, and nuts holding the bakelite base to the frame.

(*c*) Unsolder the leads from the board to the stand-off insulators around it.

(*d*) Carefully withdraw the assembly from the compartment wall; be sure not to damage any of the components mounted on the r-f chassis plate.

(*e*) To replace the assembly, reverse the procedure above.

(8) The antenna coupling coil and associated components are mounted as a subassembly at the front end of the r-f coil assembly. To remove this subassembly, proceed as follows:

(*a*) Remove the cap from the plate of tube V11. Unsolder the lead from the feedthrough insulator on the bracket of the subassembly.

(*b*) Unsolder the wire between the capacitor lug and the lug on the insulator within the assembly.

(*c*) Disconnect the leads to the gang capacitor lug.

(*d*) Turn the shaft of the coupling coil so that the movable winding is as far away from the fixed winding of the coil as possible. This will allow the removal of one mounting screw.

(*e*) Return the movable coupling coil to a position as close as possible to the fixed coil and remove the other mounting screw. The entire subassembly now can be removed.

(*f*) Lift the subassembly away from the chassis (figs. 71 through 73).

(*g*) To replace the subassembly, reverse the procedure outlined above.

e. Replacement of Variable Gang Capacitor C1. Variable gang capacitor C1 is mounted on the component side of the r-f chassis. To remove the capacitor, it is necessary to remove the r-f chassis from the rest of the assembly and then proceed as follows:

(1) Turn the unit wiring side up and remove the r-f compartment cover.

(2) Remove the r-f compartment parts as described in *d* above.

(3) Unsolder all the leads from the capacitor lugs projecting through holes in the chassis plate into the r-f coil compartment.

(4) Turn the unit component side up.

(5) Remove the screws holding capacitor C1 to the chassis. Two screws are located at the front of the capacitor and one screw is at the rear.

(6) Lift the capacitor off the chassis.

Caution: Do not remove the gears from the capacitor shafts.

(7) If the capacitor is to be replaced, remove the crown coupling and bellows by loosening the setscrews on the coupling collar; use an Allen wrench.

(8) Remove the variable cam assembly by loosening the Allen-head setscrews on the cam assembly shaft; use an Allen wrench. Two such setscrews hold the cam assembly to the capacitor shaft.

(9) Inspect the crown coupling and cam assembly before replacing them on the new or repaired capacitor.

(*a*) Place the capacitor on the r-f chassis so that the holes in the mounting brackets at the front and rear of the capacitor line up with the corresponding holes on the chassis plate.

(*b*) Insert and tighten the three mounting screws.

(*c*) When placing the capacitor on the chassis, be sure the large gear clears the cutout provided for it on the chassis plate. Be sure the capacitor lugs clear the holes on the chassis plate.

(*d*) Turn the chassis, wiring side up, and reconnect all solder connections to the capacitor lugs; be sure the proper connections are made.

(*e*) Replace the cam arrangement on the shaft at the top of the capacitor.

(*f*) Tighten the two setscrews that hold the cam to the capacitor shaft.

(*g*) Replace the crown coupling over the capacitor shaft associated with the large gear. Tighten the two setscrews.

(*h*) Rotate the cam to be sure the finger on the antenna tuning capacitor rides over the cam links and is not caught between the two extreme adjustment screws on the cam assembly.

f. Replacement of Variable Capacitor C17. The procedure for removing the harmonic-generator tuning capacitor C17 is as follows:

(1) Turn the r-f chassis wiring side up.

(2) Disconnect all leads joining the capacitor to the components on the chassis.

(3) All connections are made on the two ends of the capacitor.

(4) Turn the capacitor gears so that the green Allen-head setscrews become accessible through the r-f coil compartment (after the cover for that compartment has been removed). Using an Allen wrench, release the green setscrews. Do not touch the red setscrews.

(5) Pull out the brass shaft projecting from the front of the chassis to the shaft of the large gear on the capacitor.

(6) Turn the chassis component side up and remove the three mounting screws. Two of these mounting screws are located between capacitor C1 and the crystal switch assembly. The third one is at the rear of the crystal switch assembly. If necessary, remove the crystal switch cover to remove this screw. Carefully move the capacitor toward the rim of the chassis sufficiently to clear the coupling collar from the r-f coil compartment and lift the capacitor off the chassis. Be careful not to damage the gears or the components mounted on the chassis. To replace the capacitor, follow the procedure given above in the reverse order.

(7) Place the capacitor on the chassis so that the large gear clears the slot cut out for it on the chassis plate.

(8) Line up the capacitor so that the holes in the three mounting feet line up with the holes on the chassis plate.

(9) Reassemble the capacitor to the chassis by means of the screws, nuts, and lockwashers.

(10) Reinsert the brass shaft into the coupling collar and tighten the Allen-head setscrews.

(11) Reconnect all wires and parts to the capacitor. Check against the schematic diagram for the particular unit (figs. 79 through 82) to be sure the connections have been made correctly.

g. Antenna Tuning Capacitor Assembly. To remove this capacitor and the tuning subassembly mounted on it, proceed as follows:

(1) Remove the r-f chassis from the panel and chassis assembly and place it wiring side up.

(2) Unsolder the lead from the lug on the ceramic insulator.

(3) Using an hexagonal wrench, remove the four nuts from the capacitor mounting studs.

(4) Lift the capacitor off the component end of the chassis. When replacing this capacitor, reverse the procedure above: be sure the finger on the lever rides over the cam assembly links and is not caught between the two extreme adjustment screws. The spring must be attached between the stud on the capacitor bracket and the stud on the lever attached to the pinion gear. The pinion gear must be seated firmly on the capacitor shaft; therefore, tighten the setscrews which hold the pinion gear to the capacitor shaft.

h. Replacement of Components in Tuning Unit Cans. The tuning units on the r-f and i-f chassis are mounted by means of two studs (part of the tuning unit assembly) and two nuts. To replace the unit as a whole, unsolder the leads and remove the two nuts on the wiring side of the chassis. To gain access to components within the can, remove the two screws at the top of the can that hold the cover to the assembly. Lift off the cover.

i. Crystal Switch Assembly. The crystal switch assembly S1 is mounted at the rear of the r-f chassis (fig. 43).

(1) To gain access to the crystals, remove the back plate of the panel and chassis assembly.

(2) Remove the two screws holding the crystal switch assembly cover in place. The crystals now are exposed to view and may be replaced simply by plugging a new crystal into the socket.

(3) To remove the assembly, unsolder the

wire connected to the feedthrough terminal on the side of the assembly. Remove the four screws, two on each side, holding the crystal switch assembly mounting brackets to the r-f chassis.

(4) To gain access to the switch, remove the four screws at the front of the assembly and pull the crystal mounting bracket away from the switch compartment.

(5) Before replacing the assembly, line up the two gears so that the markings on each touch each other and form a straight line.

(6) Inspect the switch to be sure the arm rests on the first switch contacts.

(7) Insert the crystal mounting plate in the compartment and restore the four screws holding the crystal plate to the compartment.

(8) Place the assembly over the chassis so that the four mounting holes line up with the corresponding holes on the chassis.

Note. Be sure the idler (lower gear) meshes with the large gear protruding through the chassis plate.

(9) Replace and tighten all mounting screws.

(10) Replace the crystals and the crystal switch assembly cover.

(11) Resolder the wire to the feedthrough terminal on the side of the assembly.

j. Relay O301. Relay O301 is mounted at the top of the front panel by means of a mounting bracket and two screws. To remove the relay, proceed as follows:

(1) Disengage the panel from the panel and chassis (fig. 41).

(2) Remove the spade lug on the beaded wire from the ceramic insulator on the r-f chassis.

(3) Unsolder all leads from the relay.

(4) Remove the two mounting screws.

(5) Use a relay spring bender to aline the relay contacts. The relay contacts are alined properly when moving the armature causes the moving contact and the contact farthest away from the body of the relay to close, and when releasing the armature causes the moving contact and the contact nearest to the body of the relay to close.

(6) Use a contact burnisher to clean contacts thoroughly.

(7) Wipe off with a clean lint-free cloth.

(8) Use a relay spring bender to straighten all bent or warped contact springs.

(9) If the relay is damaged beyond repair and replacement is necessary, remove the two screws which mount the relay to the panel. Lift the relay off the chassis and disconnect all wires.

(10) Before mounting the relay, reconnect all wires.

(11) Be sure the contacts on the new relay are alined properly as described in (5) above.

(12) Mount the relay to the panel with the two screws and lockwashers.

k. Meter. The meter is mounted to the front panel by means of the four screws on the face of the meter. To remove the meter, proceed as follows:

(1) Remove the two nuts on the back of the meter to remove the wiring.

(2) Remove the four screws on the face of the meter. The meter now will slip through the front of the panel. Remove the rubber gasket.

Note. To remove the meter, it is not necessary to disconnect the front panel assembly.

l. Dial-Drive Mechanism. To remove the dial-drive mechanism, it is necessary to remove the front panel from the panel and chassis assembly. Proceed as follows:

(1) Remove the two large screws holding the knobs to the dial-drive mechanism shaft on the front panel.

(2) Remove the knobs and the stops.

(3) Remove the 14 screws holding the dial plate to the panel.

(4) Remove the dial plate.

(5) Remove the five mounting screws, on the rear of the panel, holding the projection from the dial-drive mechanism to the panel.

(6) Remove the dial lamp assembly by removing the two screws holding it to the dial drive.

(7) Remove the O ring rubber seals, the retainer ring, and spring washer from each shaft.

(8) Lift the dial-drive mechanism off the rear of the panel. To replace, reverse the above procedure; see that the O ring seal is not damaged.

m. Replacement of Dial Lamp. To replace the dial lamp, simply remove the two screws holding the dial lamp cover to the dial plate. The dial lamp assembly and the dial lamp will be accessible. The lamp is held in a spring clip type socket (fig. 12).

n. Switches. To remove the panel-mounted switches, proceed as follows:

(1) Disconnect the panel from the panel and chassis assembly.
(2) Unsolder all wires from the switch; be sure to tag the leads to enable proper replacement.
(3) Remove the switch knob.
(4) Remove the castellated nut; use a spanner wrench.
(5) The switch now can be removed from the rear of the panel.
(6) When replacing the switch, examine contacts to be sure they are made properly and that the switch shaft turns freely.
(7) Reinsert the switch so that the key fits into the hole provided for it on the back of the panel.
(8) Restore the mounting nut and the knob.

69. Mechanical Alinement Procedure for Receiver-Transmitters RT–66/GRC, RT–67/GRC, and RT–68/GRC

a. After assembling the r-f chassis onto the front panel by securing and locking the two couplings to the panel and tightening the two screws on either side of the r-f chassis, the r-f chassis is alined mechanically in the following manner:

(1) Loosen the two yellow-headed No. 10 Allen-head setscrews which connect the coupling to the main tuning capacitor (C1). With both the MCS and TENTH MCS dials set at their lowest frequency settings, adjust the gears on capacitor C17 so that the two lines, inscribed on two of its gears, form a straight line. Tighten the two Allen-head setscrews as tight as possible.
(2) Loosen the two yellow-headed No. 8 Allen-head setscrews on the transmitter antenna tuning cam. Rotate the cam clockwise (viewed from the front) until the shaft resting upon the cam is set on the first pin. For the fine adjustment, push in the TRANS ANT TUNE wrench and rotate the cam slightly until the hexagonal head of the antenna tune wrench fits into the first cam adjustment screws. Then tighten the two yellow-headed Allen-head setscrews.
(3) To get the proper spring tension on the spring connected between the antenna tuning capacitor housing (C74) and the gear connected to the antenna tuning capacitor, loosen the two yellow-headed No. 6 Allen-head setscrews connecting the arm gear to C74. Lift the arm gear to disengage the segment gear. Adjust the spring tension and then reengage the teeth of the arm and segment gears. Leave the setscrews loose until the final alinement of the transmitter.
(4) To adjust the harmonic-generator capacitor (C17), remove tube type 2E24 (V11) so that the two No. 8 yellow-headed Allen-head setscrews on the coupling to the $\frac{3}{16}$-inch shaft may be loosened. After they are loosened, check the dials to be sure they are at their lowest frequency settings and adjust the gears on the harmonic-generator capacitor until the four inscribed lines (one on each of the lower gears and two in the top gear) form two straight lines. Tighten the two yellow-headed No. 8 Allen-head setscrews.
(5) To adjust the crystal switch remove its cover. Loosen the two yellow-headed No. 6 Allen-head setscrews that connect the gear to the back shaft projecting from the switchbox. Before final adjustment, be sure there is no backlash in the gear attached to the shaft projecting from the switchbox. If there is backlash, loosen the two $\frac{1}{4}$-inch hexagonal head screws holding the idler gear and adjust the gear until there is no noticeable backlash. Remove the crystal located in the upper right-hand corner of the box and place one lead of a low resistance measuring ohmmeter in the outer jack. Connect the other side of the ohmmeter to the feedthrough insulator stamped J3. Rotate the back shaft with the aid of a pair of long-nosed pliers, until zero resistance is registered on the meter. Carefully tighten the two yellow-headed No.

6 Allen-head setscrews and replace the crystal and back cover. The r-f chassis then is alined mechanically.

b. After assembling the i-f chassis onto the front panel by securing and locking the coupling to the panel and tightening the two screws on either side of the i-f chassis, the i-f chassis then is alined mechanically in the following manner:

(1) Loosen the two yellow-headed No. 8 setscrews on the coupling which connects the ⅜-inch shaft.
(2) With the TENTH MCS dial set on zero, adjust the gears on the capacitor so that the two lines, which are inscribed on its two gears, form a straight line.
(3) Tighten the two Allen-head setscrews.

Section IV. LUBRICATION AND WEATHERPROOFING

70. Lubrication

Receiver-Transmitters RT–66/GRC, RT–67/GRC, and RT–68/GRC do not require lubrication in the field. Certain parts are self-lubricated. Included in this category are the dial-drive mechanism, gears, and O-ring seals on shafts of panel-mounted components. Do not attempt to oil or grease any of these parts, since this would require disassembly. Normally, this equipment must not be disassembled in the field.

71. Weatherproofing and Rustproofing

a. General. Signal Corps equipment, when operated under severe climatic conditions, such as prevail in tropical, arctic, and desert regions, required special treatment and maintenance. Fungus growth, insects, dust, corrosion, salt spray, excessive moisture, and extreme temperatures are harmful to most materials.

b. Tropical Maintenance. A special moisture-proofing and fungiproofing treatment has been devised which, if properly applied, provides a reasonable degree of protection. This treatment is fully explained in TB SIG 13 and TB SIG 72.

c. Winter Maintenance. Special precautions necessary to prevent poor performance or total operational failure of equipment in extremely low temperatures are explained fully in TB SIG 66 and TB SIG 219.

d. Desert Maintenance. Special precautions necessary to prevent equipment failure in areas subject to extremely high temperatures, low humidity, and excessive sand and dust, are explained fully in TB SIG 75.

e. Rustproofing. Rust and corrosion can be prevented by touching up bared surfaces. Clean where necessary with fine sandpaper. Never use steel wool.

Note. For further information on general preventive maintenance techniques, refer to TB SIG 178.

72. Refinishing

a. When the finish on the case or on the panel has been scarred or damaged badly, rust and corrosion can be prevented by touching up bared surfaces. Use No. 00 or No. 000 sandpaper to clean the surface down to the bare metal; obtain a bright smooth finish. Instructions for refinishing badly marred panels and cases are given in TM 9–2851.

Caution: Do not use steel wool. Minute particles frequently enter the case and cause harmful internal shorting or grounding of circuits.

b. When a touch-up job is necessary, apply paint with a small brush. Remove rust from the case by cleaning corroded metal with Solvent, Dry Cleaning (SD). In severe cases, it may be necessary to use solvent (SD) to soften the rust and sandpaper to complete the preparation for painting. Paint used will be authorized and consistent with existing regulations.

Section V. ALINEMENT PROCEDURES

73. Test Equipment Required for Alinement

The test equipment required for alinement of the receiver-transmitter is the same as that listed in paragraph 52.

74. Initial Procedures

a. Initial Switch and Control Settings. Unless otherwise specified, the controls should be set as follows:

Control	Position
SQUELCH	OFF.
VOLUME	Extreme clockwise maximum gain.
DIAL LIGHT ON-OFF-RING	OFF.

b. Test Connections. Unless otherwise called for in the alinement procedures (pars. 75 and 76), the test connections are the same as those described in paragraph 54.

75. Receiver Alinement

a. Discriminator Alinement.

(1) Connect Signal Generator SG–12/U (G1) in series with a .006-μf capacitor between the grid (pin 6) of second limiter V112 and chassis. Connect vacuum-tube voltmeter M1 between terminals 7 and 1 of test socket X200. This meter will be referred to as the *discriminator meter.*

(2) Adjust the frequency of the signal generator to 1.4 mc, and adjust its output level to 1 volt rms.

(3) Adjust the tuning slug marked S (secondary) on L133 and L134 (fig. 6) on discriminator tuning unit T113 until the discriminator meter indicates zero.

(4) Connect meter M1 between terminals 2 and 6 of X200. This meter will be referred to as the *alinement meter.*

Note. In the above procedure, two meters are needed. Actually, the same meter may be used as the discriminator meter and as the alinement meter. If separate meters are used for the two test positions, be sure to disconnect the first meter before using the second meter.

(5) Adjust the tuning slug marked P (L132) on T113 (fig. 6) until a peak reading is obtained on the alinement meter.

Note. Since the frequencies (1.43 mc and 1.37 mc) described in (6) through (10) below are not presently available in Signal Generator SG–12/U, substitute RF Signal Generator Set AN/URM–25 (G2) for the above generator. Connect the generator as indicated in (1) above, and proceed with the instructions outlined in (6) through (11) below.

(6) Initially set the frequency of generator G2 at 1.4 mc, then readjust its frequency until the discriminator meter indicates zero. The generator frequency now is set at exactly 1.4 mc. Note the reading on the dial.

(7) Adjust the frequency of generator G2 until the dial is set .03 mc above the dial reading noted in (6) above. The generator now is set at exactly 1.43 mc.

(8) Observe the discriminator meter (pins 7 and 1 of X200) reading and note the magnitude and polarity of the reading (that is, whether it is to the right or left of zero).

(9) Adjust the frequency of generator G2 until the dial is set .03 mc below the dial reading noted in (6) above. The generator now is set at exactly 1.37 mc. Observe the discriminator meter reading and polarity of that reading. This reading and the reading in (8) above should be nearly equal and should be opposite in polarity. The difference between the two meter readings should not be greater than .6 volt.

(10) Repeat the procedure outlined in (2) through (9) above as many time as is necessary to meet the requirements described in (9) above.

(11) Replace Signal Generator SG–12/U and connect it as indicated in (1) above. Set the generator frequency to 1.4 mc and readjust the tuning slug marked S on T133 (L133 and L134, fig. 6) to obtain zero deflection on the discriminator meter.

Note. The 1.37-mc and 1.43-mc frequencies can be incorporated into Signal Generator SG–12/U by following the instructions contained in TM 11–1257. If the frequencies are incorporated, the procedures in (6), in the note preceding it, and in the first sentence of (11), need not be followed. Signal Generator SG–12/U (G1) can be substituted for generator G2 ((7) and (9) above), and set to 1.43 mc and 1.37 mc.

b. Fixed I-F Amplifier. If the following alinement procedure is followed carefully, it will result in a properly alined, fixed i-f amplifier circuit. This procedure is recommended for receivers known to be completely out of alinement, or for receivers where the alinement status is not known. If only partial or touch-up alinement is needed, proceed as indicated in (19) below.

(1) Connect Signal Generator SG–12/U (G1) in series with the .006-μf capacitor between the grid (terminal 6) of first limiter V111 and chassis.

(2) Connect the 0 to 100 microammeter (M7) (limiter meter) to terminals 5 and 1 of X200.

(3) Temporarily disable the receiver oscillator by connecting a .006-μf capacitor between the stator of capacitor C101A (or plate, term. 2 of V101) and the chassis.

(4) Set the signal generator frequency to 1.4 mc and adjust the output to .5 volt rms.

(5) Connect a temporary shunting unit between the plate (terminal 2) of first limiter V111 and the chassis. The shunting unit is composed of the series arrangement of a .006-μf capacitor and a 2,700-ohm resistor.

(6) Tune the slug marked S of secondary coil L130 (fig. 6) in tuning unit T112 until the limiter meter shows a peak reading.

(7) Shift the connection of the shunting unit to the signal grid (pin 6) of V112.

(8) Tune the slug marked P of primary coil L129 (fig. 6) in tuning unit T112 until the limiter meter shows a peak reading. Remove the shunting unit.

(9) Shift the signal generator connection to the grid (pin 6) of first fixed i-f amplifier V110. Set the frequency to 1.4 mc and adjust the output until approximately 40 μa (microamperes) is indicated on the limiter meter.

(10) Connect the shunting unit to the plate (terminal 2) of first fixed i-f amplifier V110.

(11) Tune the slug marked S of secondary coil L127 (fig. 6) in tuning unit T111 until the limiter meter shows a peak reading.

(12) Shift the connection of the shunting unit to the grid (pin 6) of first limiter tube V111.

(13) Tune the slug marked P of primary coil L126 (fig. 6) in tuning unit T111 until the limiter meter shows a peak reading.

(14) Shift the signal generator connection to the signal grid (pin 6) of receiver second mixer V109, and adjust the frequency and output level as indicated in (9) above.

(15) Shift the shunting unit connection to the plate (pin 2) of receiver second mixer V109 (or term. 2 of T110).

(16) Tune the slug marked S of secondary coil L124 (fig. 6) in tuning unit T110 until the limiter meter shows a peak reading.

(17) Shift the shunting unit connection to the grid (pin 6) of tube V110.

(18) Tune the slug marked P of primary coil L123 (fig. 6) in tuning unit T110 until the limiter meter shows a peak reading. Adjust the signal generator output until approximately 40 μa is indicated on the limiter meter.

(19) Connect the test equipment as described in (2), (3), and (14) above, adjust it as described in (4) above, and repeat the shunting unit connections and tuning slug adjustments described in (5) through (8), (10) through (13), and (15) through (18) above, until no further peaking improvement is obtainable.

(20) Disconnect the shunting unit, and remove the .006-μf oscillator disabling capacitor from capacitor C101A.

c. Receiver Oscillator V101. Frequency Meter Set SCR–211 (M6), or its equivalent, may be used to adjust the tuning of the receiver oscillator. If the oscillator proves to be off frequency by the troubleshooting procedure described in paragraphs 51 through 64, proceed as follows:

(1) Loosely couple Frequency Meter Set SCR–211 to the oscillator. To do this, place an insulated wire between the envelope of tube V101 and connect one end of the wire to the frequency meter input terminal Connect the headphones to the frequency meter.

(2) Adjust the frequency meter to measure 3.05 mc, and turn the TENTH MCS knob to detent position 0.

(3) With a screwdriver, adjust the slug of tuning coils L101 and L102 in tuning unit T101 (fig. 50) until a zero beat note is heard in the headphones connected to the frequency meter.

(4) Turn the TENTH MCS knob to detent position 9 and adjust the frequency meter to measure 3.95 mc.

(5) Adjust trimmer capacitor C101A (fig. 6) until a zero beat note is heard in the frequency meter headphones.

(6) Repeat the adjustments of the inductance trimmer on T101 for dial position 0, and

trimmer capacitor C101A for dial position 9, as described in (2) through (5) above, until a zero beat note is heard for both detent positions of the dial.

(7) Rotate the TENTH MCS knob through each one of positions 1 through 8 and, for each step, adjust the frequency meter control until a zero beat is obtained. The frequency meter reading should increase from 3.05 mc ±5 kc in 100-kc steps as the knob is rotated from position 1 (3.15) to position 8 (3.85 mc).

(8) If the requirement described in (7) above is not met, proceed with the adjustments described in *d* below. If the requirement is met, proceed with the adjustments of the variable i-f amplifier, as described in *e* below.

d. Adjustment of TENTH MCS Dial Detent Screws. If the requirements outlined in the preceding are not met, that is, if the tracking error at any one or more of the dial detent positions exceeds the permissible 5-kc limit, it will be necessary to readjust the detent screws of the TENTH MCS control. The procedure is as follows:

(1) Remove the TENTH MCS and MCS knobs (fig. 12). To do this, remove the set screws which hold the knobs to the dial shafts.

(2) Take out all screws around the periphery of the kidney-shaped dial plate, and remove the dial plate. This will expose the adjustable detent stops. Replace the knobs to permit turning the dial.

(3) Set the TENTH MCS dial to the detent position at which the 5-kc tracking error limit was exceeded.

(4) Connect the frequency meter as described in *c* above, and set the frequency to the frequency corresponding to the particular detent position.

(5) Loosen the screw associated with the particular detent position.

(6) With a pair of long-nosed pliers, turn the detent stop until a zero beat note is established in the headset.

(7) Hold the detent stop in position, and retighten the detent stop screw.

(8) Repeat this procedure for each position at which the requirements outlined in *c*(7) above are not met.

(9) Replace the dial plate cover and the knobs.

e. Variable I-F Amplifier.

(1) Connect the limiter meter (M7) to terminals 5 and 1 of X200.

(2) Connect the shunting unit (.006 μf in series with 2,700 ohms) between the plate (pin 2) of V108 and the chassis.

(3) Connect Signal Generator SG–12/U (G1) through a .006-μf capacitor between the grid (pin 6) of second variable i-f amplifier, tube V108 and the chassis.

(4) Turn the TENTH MCS dial to position 9 and set the signal generator frequency to 5.35 mc. Adjust the generator output until 40 μa is indicated on the limiter meter.

(5) Adjust trimmer capacitor C101M (fig. 6) until the limiter meter shows a peak reading. Keep the limiter meter reading constant at 40 μa by reducing the signal generator output as the alinement proceeds.

(6) Set the TENTH MCS control to detent position 0.

(7) Set the frequency of the signal generator to 4.45 mc and adjust the output until approximately 40 μa is indicated on the limiter meter.

(8) Adjust the tuning slug of secondary coil L120 (fig. 6) in tuning unit T109 until a peak reading is obtained on the limiter meter and, at the same time, lower the injected grid signal so that the limiter meter reading always is approximately 40 μa.

(9) Repeat the steps outlined in (4) through (8) above until a maximum limiter meter reading is obtained, without retuning, at both ends of the TENTH MCS dial.

(10) Connect the shunting unit between the signal grid (pin 6) of V109 and the chassis.

(11) Reset the TENTH MCS dial to position 9. Set the signal generator frequency to 5.35 mc, and adjust the output level to obtain a limiter meter reading of 40 μa.

(12) Tune trimmer capacitor C101K (fig. 6) until the limiter meter shows a peak reading; keep the limiter meter reading constant at 40 μa.

(13) Change the setting of the TENTH MCS dial to position 0. Set the signal generator frequency to 4.45 mc, and adjust the output level to obtain a limiter meter reading of 40 μa.

(14) Adjust the slug of coil L119 (fig. 6) in tuning unit T109 until the limiter meter shows a peak reading and, at the same time, lower the injected grid signal so that the limiter meter reading always is approximately 40 μa.

(15) Repeat the steps outlined in (11) through (14) above.

(16) Disconnect the shunting unit.

(17) Shift the signal generator connection to the grid (pin 6) of V107.

(18) Change the dial setting to position 9. Set the signal generator frequency to 5.35 mc, and adjust the output level as indicated in (13) and (14) above. Adjust trimmer capacitor C101H (fig. 6) to obtain a peak reading on the limiter meter.

(19) Return the dial to position 0, change the signal frequency to 4.45 mc, and adjust the output level as indicated in (13) and (14) above.

(20) Adjust the tuning slug of L118 (fig. 6) in tuning unit T108 to obtain a peak reading on the limiter meter; keep the meter reading at approximately 40 μa.

(21) Repeat the steps outlined in (18) through (20) above.

(22) Reset the dial to position 9. Shift the signal generator connection to the signal grid (pin 6) of V2. Set the signal generator frequency to 5.35 mc, and adjust the output level until the limiter meter indicates approximately 70 μa. Adjust trimmer capacitor C101F (fig. 6) until the limiter meter shows a peak reading.

(23) Return the dial to position 0. Set the signal generator frequency to 4.45 mc, and adjust the output level until the limiter meter indicates approximately 70 μa. Adjust the slug of coil L117 (fig. 6) in tuning unit T107 to obtain a peak reading on the limiter meter.

(24) With the signal generator connected to pin 6 of V2, repeat the tuning adjustment procedure outlined in (18) through (23). Adjust the coils with the dial set at position 0, and the signal generator frequency set at 4.45 mc. Adjust the trimmer capacitors with the dial set at position 9, and the signal generator frequency set at 5.35 mc. Continue these adjustments until no improvement in the peaking of the variable i-f amplifier circuits is obtainable.

(25) Check the gain and band width of the i-f amplifier as described in paragraphs 61 and 83.

f. Crystal Oscillator-Harmonic Generator and First Harmonic Amplifier Circuits.

(1) Connect voltmeter M1 negative lead to test point E4H, and the positive lead to the chassis. Test point E4H (fig. 5) is located at the junction of resistors R16 and R17 in the grid circuit of first harmonic amplifier V4.

(2) Turn the MCS dial to the detent position which is 1 mc below the highest mc setting. Turn the TENTH MCS dial to detent position 0.

(3) Adjust trimmer capacitor C16 (fig. 7) in the plate circuit of V3 to obtain a peak reading on the meter.

(4) Shift the meter connection to test point E2L (fig. 5), and adjust trimmer capacitor C26 (fig. 4) for a peak reading of the meter. This test point is located at the junction of resistors R7 and R8 in the grid circuit of tube V2.

(5) Turn the MCS dial to the detent position which is 1 mc above the lowest mc reading on the dial. Return the meter lead to test point E4H.

(6) Adjust the tuning slug of coil L6 (fig. 5) in tuning unit T3 to obtain a peak reading on the meter.

(7) Transfer the meter connection from test point E4H to test point E2L.

(8) Adjust the tuning slug of L8 (fig. 5) in tuning unit T4 to obtain a peak reading on the meter.

(9) Repeat the adjustment of the coils and capacitor trimmers at the l-f and h-f ends of the MCS dial, respectively, as described in (1) through (8) above, until no further peaking of the inductor or capacitor trimmers is necessary.

(10) Check the voltmeter readings at test points E4H and E2L. The voltmeter should indicate more than .4 and 1 volt at E4H and E2L, respectively.

g. Receiver R-F Circuit.

(1) Connect the limiter meter (terminals 5 and 1 of X200) and the discriminator meter (terminals 7 and 1 of X200).

(2) Connect Signal Generator SG–12/U to the grid (pin 1) of receiver r-f amplifier V1 through a .006-μf mica capacitor. Keep the test leads as short as possible.

(3) Turn the MCS dial to 1 mc below the highest mc setting and turn the TENTH MCS dial to position 0.

(4) Adjust the signal generator frequency to correspond to the MCS dial setting, and adjust the output level to obtain a limiter meter reading of approximately 70 μa.

(5) Adjust trimmer capacitor C1C (fig. 5) until the limiter meter shows a peak reading.

(6) Turn the MCS dial to 1 mc above the lowest mc setting.

(7) Adjust the signal generator frequency to correspond to the MCS dial setting, and adjust the output level to obtain a 70-μa reading on the limiter meter.

(8) Adjust the tuning slug of coil L3 (fig. 4) in tuning unit T2 until the limiter meter shows a peak reading; keep the limiter reading at approximately 70 μa.

(9) Repeat the steps outlined in (3) through (8) above until no further peaking is obtainable.

(10) Shift the signal generator connection to the ANT jack on the front panel.

(11) Turn the MCS dial to 1 mc below the highest mc setting, the TENTH MCS dial to position 0, and adjust the frequency of the signal generator to correspond to the dial setting.

(12) Raise the output level of the signal generator until the limiter meter reading is slightly above that obtained with the zero signal generator input.

(13) Readjust the frequency of the signal generator until the discriminator meter indicates zero.

(14) Adjust the REC ANT TUNE screw (trimmer capacitor C1A) to obtain a peak reading on the limiter meter. This adjustment screw is located on the front panel.

(15) Raise the output level of the signal generator to obtain a 70-μa reading on the limiter meter.

(16) Turn the MCS dial to 1 mc above the lowest mc setting, and adjust the signal generator frequency to obtain a zero reading on the discriminator meter.

(17) Adjust the inductance of antenna coil L1 (fig. 4) in tuning unit T1 to obtain a peak reading on the limiter meter.

(18) With the test signal applied to the ANT connector, repeat the adjustments of coil L3 (fig. 4), trimmer capacitor C1C (fig. 5), coil L1 (fig. 4), and antenna trimmer capacitor C1A as described in (2) through (17) above, until no further peaking of the limiter meter is obtainable. Adjust the coils with the MCS dial set 1 mc above the lowest mc setting, and adjust the capacitors with the MCS dial at 1 mc below the highest setting. The peak limiter meter reading should be obtained at the same time that the discriminator meter indicates zero.

(19) Disconnect the signal generator, and note the limiter meter reading. This reading should be between 11 μa and 33 μa.

76. Transmitter Alinement

a. Preparation. Be sure that the dummy antenna load is connected to the ANT jack. Connect a microphone (with push-to-talk button) to the AUDIO connector as shown in figure 61. Connect a pair of headphones to terminals E and D of REC-TR CONTROL connector J312. Set DIAL LIGHT ON-OFF-RING switch S302 to the OFF position. Set the VOLUME control in the maximum clockwise position. Set the SQUELCH control to the OFF position. Turn the OPERATE switch on the power supply to the TRANS & RECEIVE position, and turn the TRANS POWER switch to the HIGH position. Allow a warm-up period of a few minutes before proceeding with the alinement.

Caution: High voltages are exposed when the transmitter is turned on. Be careful to avoid shock. Use insulated screwdrivers. Before touching a screwdriver or test probe to a terminal, be sure that adjustment is made at the correct slug and that measurement is made at the correct terminal. Refer to the schematic diagram for the unit (figs. 79 through 82).

b. Transmitter Oscillator V104A. The purpose of the following adjustments is to make transmitter oscillator V104A track with receiver oscillator V101 and the i-f circuits of the receiver. The output of the oscillator is fed as sidetone to the i-f amplifier stages. If both the receiver oscillator and the transmitter oscillator are tuned correctly, the resultant beat frequency produced in the receiver second mixer produces a zero voltage at the output of the discriminator, as measured between terminals 7 and 1 of test socket X200. If either of the oscillators is off frequency, the beat-frequency voltage at the output of the discriminator will not be zero, and its magnitude can be taken as a measure of tracking error. Since the receiver oscillator circuit and the i-f stages already have been alined in accordance with the procedure outlined in paragraph 75, any tracking error shown is due to the transmitter oscillator. Make adjustments as follows:

(1) Connect vacuum-tube voltmeter M1 between terminals 7 and 1 of test socket X200 (discriminator meter).

(2) Connect clip leads across capacitors C194B and C194C (fig. 50) to disable the afc circuit.

(3) Turn the TENTH MCS dial to detent position 9. Operate the push-to-talk switch.

(4) Adjust oscillator trimmer capacitor C101D (fig. 6) to obtain a zero reading on the discriminator meter.

(5) Turn the TENTH MCS dial to detent position 0.

(6) Operate the microphone push-to-talk switch.

(7) Adjust the tuning slug (coils L109 and L110) on tuning unit T103 (fig. 50) until a zero reading is obtained on the discriminator meter.

(8) Repeat the steps outlined in (3) through (7) above until no further adjustment of T103 and C101D is necessary for zero readings on the discriminator meter.

(9) Turn the TENTH MCS dial in succession to each of the remaining detent positions (2 through 8) and observe the discriminator meter. For each detent position of the TENTH MCS dial, the discriminator meter reading should be less than .2 volt.

(10) If the requirement in (9) above is not met, a compromise adjustment of trimmer capacitor C101D and tuning inductance of T103 is necessary. To do this, repeat the adjustments outlined in (3) through (8) above for detent positions 1 and 8 or 2 and 7 instead of for 0 and 9.

(11) When the requirement is met for all detent positions of the TENTH MCS dial, remove the clip leads from across capacitors C194B and C194C, and recheck to see that the discriminator meter still reads not more than .2 volt for each detent position of the dial.

c. Check of Crystal Oscillator-Harmonic Generator Operation. The crystal oscillator-harmonic generator operation has been checked and receiver adjustments have been made (par. 75*g*). Recheck as follows:

(1) Measure the voltage between terminal 3J and ground. This terminal is the standoff insulator mounted on the side of the crystal-switch assembly (fig. 5). The voltage should be at least 12 volts for each detent position of the MCS dial. If the correct voltage is not obtained for any detent position, replace the crystal associated with that position. See the label on the crystal-switch assembly cover.

(2) Measure the grid drive for the first harmonic amplifier by measuring the voltage between test point E4H (fig. 5) and the chassis (par. 75*f*(10)). If necessary, readjust C16 (fig. 7) with the MCS dial set to 1 mc below the highest frequency detent position, and L6 (fig. 5) in T3 with the dial set to 1 mc above the lowest mc position, as described in paragraph 75*f*.

(3) Measure the output of the first harmonic amplifier by measuring the grid drive on the receiver first mixer between test point E2L and the chassis (par. 75*f*(10)). Adjust, if necessary, as described in paragraph 75*f*.

Caution: High voltages are present at at both E6A and E6B (4 below). Do not touch the test meter while the push-to-talk button is operated. Insulate the meter case from ground.

(4) Measure the voltage between the test points E6A and E6B (figs. 65 through

67). This voltage is a measurement of the output of the second harmonic amplifier applied to the screen grid (pin 3) of transmitter mixer V6. For a properly adjusted harmonic amplifier, the voltage between E6A and E6B (figs. 65 through 67) should be between 2 and 6 volts.

(5) If the requirement in (4) above is not met, turn the MCS dial to 1 mc above the lowest mc detent position, and adjust the tuning slug (coil L9) of tuning unit T5 (fig. 5) until the meter between E6A and E6B (figs. 75 through 67) shows a peak reading. Turn the MCS control to 1 mc below the highest mc detent position, and adjust trimmer capacitor C33 (fig. 7) until the meter shows a peak reading.

(6) Repeat the alternate adjustment of the tuning coil and the trimmer capacitor for the l-f and h-f ends of the dial, respectively, until no further peaking adjustment is possible.

Note. At this point, it may be necessary to recheck and readjust trimmer capacitors C16, C33 (fig. 7), and C26 (fig. 4) (h-f end of dial) and tuning units T3, T4, and T5 (fig. 5) (l-f end of dial) to obtain the best possible tuning adjustment of the crystal oscillator-harmonic generator and the harmonic amplifiers.

d. Preparation for Adjustment of Transmitter H-F Circuits.

(1) Turn the MCS dial to the detent position which is 1 mc below the highest mc setting of the dial. Turn the TENTH MCS dial to the zero detent position.

(2) Turn the OPERATE switch on the power supply to the TRANS & RECEIVE position, and the TRANS POWER switch on the power supply to the HIGH position.

Caution: High potentials of 450 volts now are applied to the transmitter. Be very careful not to touch any metal parts of the high-powered circuits. Use clip leads which are insulated against high voltages when making test connections.

(3) Connect a voltmeter (M1) between test points E9G and E9F (fig. 47). The voltage measured at these test points is the power amplifier grid drive.

(4) Connect a voltmeter (M1) between test points E9H and E9J (fig. 47). The voltage measured at this point gives an indication of the plate current of V11.

Note. Test points E9F through E9J are grouped on four-prong socket J3 (fig. 5). Test points E9G and E9F are labeled A on the socket. Test points E9H and E9J are labeled B on the socket.

Caution: High voltages are present at both E9H and E9J. Do not touch the plate test meter while the push-to-talk button is operated. Insulate the meter case from ground.

(5) Operate the push-to-talk button and observe the grid voltage and plate voltage meter readings. The grid drive meter should indicate between 1.5 and 6 volts. At the same time, the plate meter should indicate between .2 and .6 volt.

(6) If the meter readings are not within the specified limits, and if a check of tube socket voltages (par. 63) shows that all operating potentials to the transmitter are correct, proceed with the alinement adjustments described in *e* below.

e. Transmitter H-F Circuit Tuning.

Note. If only partial or touchup alinement is necessary, proceed as indicated in (1) through (2) below, except that the motor is left at test points E9f and E9G in (9) through (12), and (15) through (18) below.

(1) Turn the TRANS POWER switch (power supply) to the LOW position.

(2) Turn the TRANS ANT COUPLING control on the front panel to the extreme counterclockwise position to obtain minimum coupling.

(3) Use a short length of wire equipped with clips, and connect test terminal 9L to ground. (This lead should be less than 2 inches long.)

(4) Connect the grid drive (E9G and E9F) and plate meters (E–9H and E–9J) (fig. 65).

(5) Turn the OPERATE switch on the power supply to TRANS RECEIVE.

(6) Turn the MSC dial to the detent position which is 1 mc below the highest mc setting. Turn the TENTH MCS dial to detent position 0.

(7) Adjust trimmer capacitor C1M (fig. 5) in the plate circuit of V11 until a minimum reading is obtained on the plate meter. The plate meter should indicate 1.8 volts

maximum when the minimum reading is obtained.

(8) Set the MCS dial to the detent setting which is 1 mc above the lowest mc setting.

(9) Adjust the tuning slug of L9 (fig. 5) in T5 of second harmonic amplifier V5 until a peak reading is obtained on the meter (M1) connected between test points E6A and E6B (fig. 65).

(10) Adjust the tuning slug of L12 (fig. 7) in T6 (plate circuit of transmitter mixer stage V6) until the meter (M1) connected to test point E8G and ground (fig. 65) shows a peak reading.

(11) Adjust the tuning slug of L16 (fig. 7) in T7 (plate circuit of r-f amplifier stage V7 and V8) until a peak reading is shown on the meter (M1) connected to test point E8G and ground.

(12) Adjust the tuning slug of L18 (fig. 7) in T8 (plate circuit of transmitter drivers V9 and V10) until the meter (M1) connected to test points E9F and E9G (fig. 65) shows a peak reading.

(13) With a screwdriver, turn the fiber shaft on the top of the r-f coil assembly, which positions the shorted turn in antenna coupling assembly T9 (figs. 71 through 73), until a minimum reading is obtained on the power amplifier plate meter (E9H and E9J).

(14) Turn the MCS dial to the detent position which is one step below the highest mc setting.

(15) Adjust trimmer capacitor C33 (fig. 7) (second harmonic amplifier V5) to obtain a peak reading on the meter (M1) connected between test points E6A and E6B.

(16) Adjust trimmer capacitor C1E (fig. 5) (transmitter mixer V6) to obtain a peak reading on the meter (M1) connected between test point E8G and ground.

(17) Adjust trimmer capacitor C1G (fig. 5) (transmitter r-f amplifiers V7 and V8) to obtain a peak reading on the meter connected between test points E8G and ground.

(18) Adjust trimmer capacitor C1K (fig. 5) (transmitter drivers V9 and V10) to obtain a peak reading on the meter (M1) connected between test points E9F and E9G.

(19) Adjust trimmer capacitor C1M (fig. 5) until a minimum reading is obtained on the power amplifier plate meter (E9H and E9J).

(20) Repeat the steps described in (6) through (19) above until no further peaking or dipping is possible by adjustment of either coils or capacitor trimmers.

(21) Remove the grounded test lead from terminal L.

f. Neutralization Adjustment. The adjustment described in (2) below should not be attempted unless it is certain that neutralization is required, and then only by experienced maintenance personnel. The neutralization adjustment is made at the factory, and the neutralization control is sealed with glyptal. Unless major repairs are made on the transmitter circuits, neutralization is not required.

(1) Check to see whether neutralization is required, as follows:

(*a*) See that the driver stage (V9 and V10) is alined properly by observing whether peak readings of 3.5 volts minimum are obtained on the meter (M1) connected between test points E9F and E9G for both the h-f end of the dial and the l-f end of the dial.

(*b*) Disconnect the coaxial cable which joins the transmitter mixer (V6) of the transmitter oscillator (V104A) by disengaging P2 and J102 (fig. 40).

(*c*) Observe the meter connected between test points E9F and E9G. The voltage reading should drop to less than .1 volt.

(2) If the requirement in (1) above is not met, neutralization adjustment is required. Proceed as follows:

(*a*) Remove the fuse in the 450-volt and lead of the power supply.

(*b*) Break the glyptal seal on T8 which covers the shaft of neutralizing capacitor C65 (fig. 7).

(*c*) Disconnect the coaxial cable as indicated in (1) (*b*) above.

(*d*) Connect a voltmeter (M1) across test points E7B and E8G (fig. 47). Use the 2-volt scale of the meter.

(*e*) Connect a voltmeter (2-volt scale) between test points E9G and E9F (fig. 65).

(*f*) Set the power supply TRANS POWER switch in the HIGH position and set the OPERATE switch to the TRANS & RECEIVE position.

(*g*) Turn the MCS dial to 1 mc below its highest mc setting. Turn the TENTH MCS to detent position 0.

(*h*) Operate the microphone push-to-talk switch.

(*i*) Adjust trimmer capacitor C1G (fig. 5) in the plate circuit of the transmitter r-f stage until the meter connected to test points E7B and E8G shows a peak reading.

(*j*) Adjust trimmer capacitor C1E (fig. 5) in the plate circuit of the transmitter mixer stage until the meters (E7B and E8G) shows a peak reading.

(*k*) Adjust trimmer capacitor C33 (fig. 7) in the plate circuit of the second harmonic amplifier until the meter (E7B and E8G) shows a peak reading.

(*l*) Adjust trimmer capacitor C1K (fig. 5) in the plate circuit of the transmitter driver stage until the meter (E9G and E9F) shows a peak reading.

(*m*) With a nonmetallic screwdriver, adjust neutralizing capacitor C65 (fig. 7) to obtain a minimum deflection on the meter connected to E9G and E9F. To be sure that a true minimum reading is obtained, rock trimmer capacitor C65 back and forth. Gradually reduce the movement of the shaft beyond the points at which the meter reading starts to rise, and stop at the exact point at which the lowest meter reading is obtained. Note the meter reading at the dip.

(*n*) Repeat the steps outlined in (*i*) through (*m*) as many times as is necessary to reduce the meter reading at the dip to the lowest possible value. The meter reading at the dip should be less than .1 volt. If the .1-volt reading cannot be obtained, set at minimum. There should be no r-f output reading on the dummy load meter.

(*o*) Turn the power supply off and reconnect the coaxial cable by engaging P2 with J102. Replace the fuse.

(*p*) Recheck the alinement of the transmitter h-f circuit as described in *e* above.

Section VI. FINAL TESTING

77. General

If the unit does not meet the requirements outlined in paragraph 56, repeat the troubleshooting procedures given in paragraphs 56 through 64 to locate other faults. Make the necessary repairs. If the unit operates as described in paragraph 56, perform the tests outlined in paragraphs 78 through 84.

78. Overall Receiver Sensitivity

Connect the test equipment as indicated in paragraph 54, with the following exceptions:

a. Connect Signal Generator SG–12/U (G1), or equivalent, to the ANT connector on the front panel.

b. Connect an output meter (M4) to the output terminals of the power audio amplifier stage, terminals F and D of J312. Set impedience switch on meter to 600 ohms.

c. Set the controls on the front panel as follows:

Control	Position
SQUELCH	OFF.
DIAL LIGHT ON-OFF-RING switch.	OFF.
MCS dial	To 1 mc above the lowest mc setting.
TENTHS MCS dial	Zero.

d. Adjust the frequency of the signal generator to the frequency indicated by the setting of the MCS and TENTH MCS controls.

e. Adjust the signal generator output level to .5 microvolt (μv) (1.3 μv for RT–68/GRC models).

f. Apply frequency modulation to the signal generator. The modulation should be 1,000 cycles at ±15-kc deviation.

g. Adjust the VOLUME control on the front panel until the output meter indicates 600 mw.

h. Remove the modulation from the signal generator; that is, apply an unmodulated carrier.

i. Note the reading of the output meter.

j. Change the setting of the MCS dial to 1 mc below the highest mc setting and retune the signal generator to the frequency corresponding to this dial setting.

k. Again apply frequency modulation in the form of the 1,000-cycle signal at ±15-kc deviation.

l. Adjust the VOLUME control until the output meter indicates 600 mw.

m. Remove the modulation from the signal generator and again note the output meter reading.

n. Change the setting of the MCS dial to the mc position which is approximately at the center of the tuning range of the dial. Adjust the signal generator frequency accordingly. Repeat the above measurements for test signals with and without modulation. In each case, the output meter reading for the unmodulated carrier signal should be at least as follows: RT–66/GRC—22 db below 600 mw, RT–67/GRC—18 db below 600 mw, and RE–68/GRC—16 db below 600 mw. This means that the reading with an unmodulated carrier should be not more than about 3.8, 9.5, and 15 mw for RT–66/GRC, RT–67/GRC, and RT–68/GRC models, respectively. The above reading indicates the signal plus noise-to-noise ratio.

79. Variable I-F Selectivity

The variable i-f amplifier selectivity should be measured in accordance with the following procedure:

a. Connect a calibrated signal generator (G2) (calibrated by means of a frequency meter (M6)) through a .006-μf capacitor to the first mixer grid (pin 6) of V2.

b. Connect the limiter meter (M7) to terminals 1 and 5 of test socket X200.

c. Connect the discriminator meter (M1) to pins 7 and 1 of test socket X200.

d. Turn the TENTH MCS dial to position 5.

e. Adjust the calibrated signal generator to a frequency of 4.95 mc (unmodulated) and adjust the level to produce a 50-μa reading on the limiter meter.

f. Measure the signal generator output level required to obtain the limiter meter reading given in *e* above.

g. Double the output of the signal generator.

h. Raise the frequency of the signal generator to a frequency above 4.95 mc until the 50-μa limiter meter reading again is obtained.

i. Tune the signal generator to a frequency below 4.95 mc until the same limiter meter reading again is obtained. Note the frequency above and below 4.95 mc necessary to obtain the required limiter meter reading.

Requirement: The 50-μa limiter meter reading should be obtained for equal increments of the test frequency above and below 4.95 mc. The difference between the frequency above and below 4.95 mc should be 85 ±10 kc (80 ±20 kc in RT–66/GRC models bearing Order No. 18651–Phila–49, serial numbers 1–1,500). The first requirement determines whether the selectivity curve of the i-f amplifiers is symmetrical as required. The second requirement determines the band-width of the i-f amplifier at the points 6 db (twice) below the center frequency.

j. If the above requirements are not met, it is necessary to realine the i-f amplifier. The alinement procedure is given in paragraph 75*e*.

80. Spurious Response

The purpose of the following check is to determine whether the spurious response, including that of the image and of the i. f., is sufficiently below the response to signals so that the limiter grid current for high levels of spurious response does not exceed the limiter grid current obtained with the signal of normal input level.

a. Apply a test signal (signal generator G1) to the ANT connector on the front panel at the frequencies listed below for the particular receiver-transmitter under test.

(1) Receiver-Transmitter RT–66/GRC 23.5 mc.

(2) Receiver-Transmitter RT–67/GRC 33.5 mc.

(3) Receiver-Transmitter RT–68/GRC 46.5 mc.

b. Connect the limiter meter to terminals 5 and 1 of test socket X200.

c. Adjust the signal generator output level to .5 microvolt (1.3 μv for RT–68/GRC models).

d. Observe the limiter meter reading.

e. Increase the signal input level to approximately 160 μv (approximately 410 μv for RT–68/GRC models).

f. Vary the signal generator frequency between 2 mc and 100 mc. (For frequencies below 19.5 mc, signal generator G2 must be used.) Observe the meter reading.

Requirements: The limiter meter reading should remain less than the value indicated in *c* above.

81. Calibration

A heterodyne type Frequency Meter TS–174/U (M5) is required for this test.

a. Couple the frequency meter to the dummy load connected to the ANT connector on the front panel.

b. Set the MCS dial to its lowest mc setting; leave the TENTH MCS dial set at zero.

c. Turn on the transmitter by operating the microphone push-to-talk button or by setting the DIAL LIGHT OFF-ON-RING switch to the RING position.

d. Adjust the comparison frequency provided by the frequency meter until a beat note is obtained. Note the frequency at which the beat note is obtained.

e. Measure and record the frequency output of the transmitter for each of the remaining mc settings of the MCS dial.

Requirement: For each mc setting of the dial, the frequency should be not more than ±9 kc from the reading on the MCS dial.

82. Limiting Action

a. Connect a test signal generator (G1) to the ANT connector on the front panel and adjust the frequency as follows:

(1) Receiver-Transmitter RT–66/GRC 23.5 mc.

(2) Receiver-Transmitter RT–67/GRC 33.5 mc.

(3) Receiver-Transmitter RT–68/GRC 46.5 mc.

b. Set the MCS and TENTH MCS dial to the positions corresponding to the frequencies indicated in *a* above.

c. Connect an a-f output meter to terminals E and D of J312.

d. Apply 1,000-cycle modulation at ±15 kc deviation to the test signal.

e. Adjust the signal generator output level to .75μv (2μv for RT–68/GRC models) and observe the reading of the output meter. Raise the signal generator output level in the following steps: 10, 1,000, and 10,000 microvolts. Observe the output meter reading.

Requirement: The output meter reading should remain within ±3 db of the output meter reading for the .75μv (2μv in RT–68/GRC) signal mentioned in *e* above.

83. Check of Band Width

a. Fixed I-F Amplifier.

(1) Connect a limiter meter (M7) to terminals 5 and 1 of X200.

(2) Connect a calibrated signal generator (G2) in series with a .066-μf capacitor between terminal 6 of V109 and the chassis.

(3) Set the signal generator frequency to 1.4 mc, and adjust the output level to obtain a 50-μa limiter meter reading. Note the output level.

(4) Double the output of the signal generator (that is, raise the output level by 6 db).

(5) Tune the signal generator to the frequency above 1.4 mc for which the 50-μa limiter meter reading again is obtained.

(6) Tune the signal generator to the frequency below 1.4 mc for which the 50-μa limiter meter reading again is obtained.

(7) Compute the difference between the signal generator frequency settings described in (5) and (6) above. This is the band width of the fixed i-f amplifier at the points 6 db below center frequency.

Requirements: The band width at the 6-db points should be not less than 90 kc. The amount by which the signal frequency is reduced below 1.4 mc to obtain the 50-μa limiter meter reading should be approximately equal to the amount by which it was increased above 1.4 mc to obtain the same result.

b. Variable I-F Amplifier.

(1) Connect Multimeter TS–352/U (M2) between terminals 4 and 8 of X200. Use the 0- to 250-microampere scale.

(2) Connect the calibrated signal generator (G2) between terminal 6 of V2 and the chassis.

(3) Turn the TENTH MCS dial to detent position 0.

(4) Adjust the output of the signal generator to 4.45 mc, and adjust the level to give a meter reading of 100 μa. Note the level of the signal generator output.

(5) Raise the output voltage of the signal generator by 6 db (double the output).

(6) Raise the frequency of the signal generator above 4.45 mc until the reading given in (4) above again is obtained. Note the signal generator frequency for which this occurs.

(7) Lower the frequency of the signal generator below 4.45 mc and note the frequency at which the reading given in (4) above again is obtained.

(8) Compute the difference between the two frequencies given in (6) and (7) above. This is the band width at points 6 db above and below reference.

(9) Compute the difference between 4.45 mc and each of the frequencies given in (6) and (7) above.

Requirements: The band width of the i-f amplifier should be not less than 90 kc. The 6-db points above and below 4.45 mc. should be approximately the same number of kc away from 4.45 mc.

c. Overall Receiver.

(1) Set the MCS dial to a detent setting which is near the approximate center of its frequency range. For example, in the case of Receiver-Transmitter RT–67/GRC, this would be position 33. Set the TENTH MCS dial to 0.

(2) Connect the signal generator (G1) to the ANT connector on the front panel, and adjust it to a frequency corresponding to the setting of the MCS dial.

(3) Connect the discriminator meter (M1) to terminals 7 and 1 of X200 and the limiter meter (M7) to terminals 5 and 1 of X200.

(4) Adjust the frequency of the generator until the discriminator meter (terminals 7 and 1 of X200) indicates zero.

(5) Adjust the output level of the signal generator to 0, and observe the reading of the limiter meter (terminals 5 and 1 of X200).

(6) Adjust the output level of the signal generator until the limiter meter indicates a value which is about 10 percent above that described in (5) above. Note the output level of the signal generator required to obtain that reading.

(7) Raise the output voltage of the signal generator by 6 db (double the output). Note the limiter meter reading.

(8) Tune the signal generator to a frequency above the center frequency until the limiter meter reading given in (6) above again is obtained. Note the frequency.

(9) Tune the signal generator to a frequency below the center frequency until the limiter meter again indicates the reading described in (6) above. Note the frequency.

(10) Compute the difference between the frequencies described in (8) and (9) above. This is the overall receiver band width at the 6-db points.

(11) Compute the difference between each of the frequencies at the 6-db points and the center frequency. This figure is a measurement of the symmetry of the selectivity curve.

Requirements: The band width of the receiver at the 6-db points should be about 90 kc. The difference between the frequencies above and below the center frequency should be not greater than 20 kc.

d. Analysis. Incorrect band width indicates improper alinement in the stages involved. An unsymmetrical selectivity curve indicates a defective component in the tuned circuit or improper coupling between the primary and secondary windings of the double-tuned stages. If the measurements described in *c* above show that either of these defects exist, recheck the alinement of the receiver stages (par. 75). If this recheck does not clear the trouble, look for defective damping resistors, bypass capacitors, or tuning coils.

84. Check for Regeneration

a. Connect Dynamic Loudspeaker LS–166/U between terminals F and D of REC-TR CONTROL connector J312.

b. Connect limiter meter M1 between terminals 1 and 5 of X200.

c. Remove the dummy antenna from the ANT jack on the front panel of the receiver-transmitter.

d. Tune the receiver-transmitter through its en-

tire range and, at the same time, slowly tune through the range of the REC ANT TUNE control.

e. Observe any change in the audio power output level (noise), or other audible indication of regeneration as the receiver-transmitter is tuned. Observe the reading on limiter meter M1 as the receiver-transmitter is tuned.

Requirements: There should be no increase in noise in the loudspeaker. There should be no squeals or howls in the loudspeaker, or change in the reading of limiter meter M1.

CHAPTER 4

SHIPMENT AND LIMITED STORAGE AND DEMOLITION TO PREVENT ENEMY USE

85 Repacking for Shipment or Limited Storage

Wrap and pack equipment securely according to directions given in Packaging Specifications JAN–P–100 or as directed by the officer-in-charge.

86. Demolition of Materiel to Prevent Enemy Use

The demolition procedures outlined below will be used to prevent the enemy from using or salvaging this equipment. Demolition of the equipment will be accomplished only upon order of the commander.

a. Smash. Smash capacitors, transformers, resistors, sockets, plugs, and other components, using sledges, axes, handaxes, pickaxes, hammers, crowbars, or heavy tools.

b. Cut. Cut wiring, using axes, handaxes, or machetes.

c. Burn. Burn technical manual, records, and forms, resistors, capacitors, and transformers, using gasoline, kerosene, oil, flame throwers, or incendiary grenades.

d. Bend. Bend chassis, panels, and covers.

e. Explode. If explosives are necessary, use firearms, grenades, or TNT.

f. Dispose. Bury or scatter the destroyed parts in slit trenches, fox holes, or other holes, or throw them into streams.

g. Destroy. Destroy everything.

APPENDIX I

REFERENCES

Note. For availability of items listed, check SR 310–20–3, SR 310–20–4, and SR 310–20–5. Check Department of the Army Supply Catalog SIG 1 and SR 310–20–21.

1. Army Regulations

AR 380–5	Military Security (Safeguarding Security Information).
AR 750–5	Maintenance of Supplies and Equipment, Maintenance Responsibilities and Shop Operation.

2. Supply

SR 725–405–5	Preparation and Submission of Requisitions for Signal Corps Supplies.
SB 11–6	Dry Battery Supply Data.
SB 11–100	Serviceability Standards for Signal Equipment in Hands of Troops.

3. Painting, Preserving, and Lubrication

TB SIG 13	Moistureproofing and Fungiproofing Signal Corps Equipment.
TB SIG 69	Lubrication of Ground Signal Equipment.
TM 9–2851	Painting Instructions for Field Use.

4. Camouflage, Decontamination, and Demolition

FM 5–20	Camouflage, Basic Principles.
FM 5–25	Explosives and Demolitions.
TM 3–220	Decontamination.

5. Other Publications

FM 24–18	Field Radio Techniques.
FM 72–20	Jungle Warfare.
SR 310–20–3	Index of Training Publications.
SR 310–20–4	Index of Technical Manuals, Technical Regulations, Technical Bulletins, Supply Bulletins, Lubrication Orders, Modification Work Orders.
SR 310–20–5	Index of Administrative Publications.
SR 310–20–7	Index of Tables of Organization and Equipment, Reduction Tables, Tables of Organization, Tables of Equipment, Type Tables of Distribution, and Tables of Allowances.
SR 700–45–5	Unsatisfactory Equipment Report (Reports Control Symbol CSGLD–247 (R1)).
SR 745–45–5 Navy Shipping Guide, Article 1850–4 AFR 71–4	Report of Damaged or Improper Shipment (Reports Control Symbols CSGLD–66 (Army), S and A–70–6 (Navy), and AF–MC–U2 (Air Force)).
TB SIG 4	Methods for Improving the Effectiveness of Jungle Radio Communication.
TB SIG 25	Preventive Maintenance of Power Cords.
TB SIG 54	Working through Jamming with Frequency-Modulated Radio Sets.
TB SIG 66	Winter Maintenance of Signal Equipment.

TB SIG 72	Tropical Maintenance of Ground Signal Equipment.
TB SIG 75	Desert Maintenance of Ground Signal Equipment.
TB SIG 178	Preventive Maintenance Guide for Radio Communication Equipment.
TB SIG 219	Operation of Signal Equipment at Low Temperatures.
TB SIG 223	Field Expedients for Wire and Radio.
TM 9–2857	Storage Batteries, Lead-Acid Type.
TM 11–284	Radio Sets AN/GRC–3, –4, –5, –6, –7, and –8.
TM 11–286	Radio Sets AN/VRC–8, AN/VRC–9, and AN/VRC–10.
TM 11–287	Radio Sets AN/VRQ–1, AN/VRQ–2, and AN/VRQ–3.
TM 11–291	Radio Sets AN/VRC–13, AN/VRC–14, and AN/VRC–15.
TM 11–415	Dry Batteries.
TM 11–430	Batteries for Signal Communication, Except Those Pertaining to Aircraft
TM 11–455	Radio Fundamentals.
TM 11–466	Radar Electronic Fundamentals.
TM 11–476	Radio Direction Finding.
TM 11–483	Suppression of Radio Noises.
TM 11–486	Electrical Communication Systems Engineering.
TM 11–611	Radio Sets AN/VRC–16, AN/VRC–17, and AN/VRC–18.
TM 11–642	Radio Sets AN/VRC–20, –21, and –22.
TM 11–661	Electrical Fundamentals (Direct Current).
TM 11–665	C-W and A-M Radio Transmitters and Receivers.
TM 11–681	Electrical Fundamentals (Alternating Current).
TM 11–4000	Trouble Shooting and Repair of Radio Equipment.

6. Auxiliary Equipment and Test Equipment

TM 11–300	Frequency Meter Sets SCR–211–A, –B, –C, –D, –E, –F, –J, –K, –L, –M –N, –O, –P, –Q, –R, –T, –AA, –AC, –AE, –AF, –AG, –AH, –AJ, –AK –AL, and –AN.
TM 11–303	Tests Sets I–56–C, I–56–D, I–56–H, and I–56–J.
TM 11–307	Signal Generators I–72–G, –H, –J, –K, and –L.
TM 11–321	Test Set I–56–E.
TM 11–2524	Oscillators I–151–A and I–151–E.
TM 11–2526	Oscilloscope BC–1060–A.
TM 11–2613	Voltohmmeter I–166.
TM 11–2624B	Voltohmmeters, TS–294/U, TS–294B/U, and TS–204C/U.
TM 11–2626	Test Units I–176, I–176–A, and I–176–B.
TM 11–2627	Tube Testers I–177 and I–177A.
TM 11–2684	Audio Oscillators TS–312/FSM–1 and TS–382/U.
TM 11–2684A	Audio Oscillator TS–382A/U.
TM 11–2698	Frequency Meter FR–67/U.
TM 11–4700	Electrical Indicating and Measuring Instruments; Repair Instructions.
TM 11–5017	Output Meter TS–585A/U and TS–585B/U.
TM 11–5044	Frequency Meter TS–174B/U.
TM 11–5500	Multimeter TS–297/U.
TM 11–5511	Electronic Multimeter TS–505/U.
TM 11–5527	Multimeter TS–352/U.
TM 11–5549	Electronic Multimeter ME–6A/U
TM 11–5551	RF Signal Generator Set AN/URM–25.

RESISTOR COLOR CODE MARKING
(MIL-STD RESISTORS)

AXIAL-LEAD RESISTORS (INSULATED)

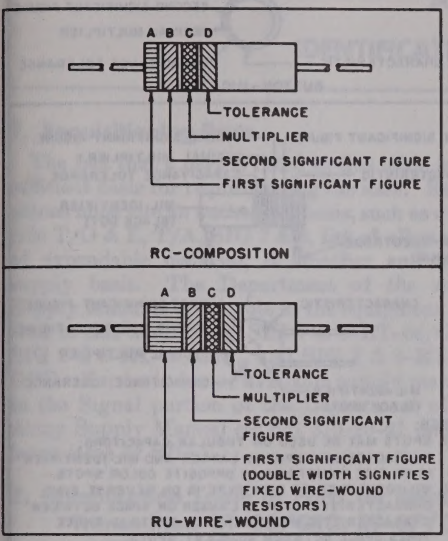

RADIAL-LEAD RESISTORS (UNINSULATED)

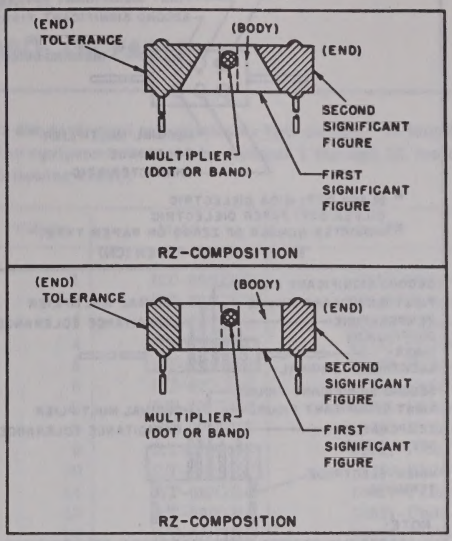

RESISTOR COLOR CODE

BAND A OR BODY*		BAND B OR END*		BAND C OR DOT OR BAND*		BAND D OR END*	
COLOR	FIRST SIGNIFICANT FIGURE	COLOR	SECOND SIGNIFICANT FIGURE	COLOR	MULTIPLIER	COLOR	RESISTANCE TOLERANCE (PERCENT)
BLACK	0	BLACK	0	BLACK	1	BODY	± 20
BROWN	1	BROWN	1	BROWN	10	SILVER	± 10
RED	2	RED	2	RED	100	GOLD	± 5
ORANGE	3	ORANGE	3	ORANGE	1,000		
YELLOW	4	YELLOW	4	YELLOW	10,000		
GREEN	5	GREEN	5	GREEN	100,000		
BLUE	6	BLUE	6	BLUE	1,000,000		
PURPLE (VIOLET)	7	PURPLE (VIOLET)	7				
GRAY	8	GRAY	8	GOLD	0.1		
WHITE	9	WHITE	9	SILVER	0.01		

*FOR WIRE-WOUND-TYPE RESISTORS, BAND A SHALL BE DOUBLE-WIDTH. WHEN BODY COLOR IS THE SAME AS THE DOT (OR BAND) OR END COLOR, THE COLORS ARE DIFFERENTIATED BY SHADE, GLOSS, OR OTHER MEANS.

EXAMPLES (BAND MARKING):
10 OHMS ±20 PERCENT: BROWN BAND A; BLACK BAND B; BLACK BAND C; NO BAND D.
4.7 OHMS ±5 PERCENT: YELLOW BAND A; PURPLE BAND B; GOLD BAND C; GOLD BAND D.

EXAMPLES (BODY MARKING):
10 OHMS ±20 PERCENT: BROWN BODY; BLACK END; BLACK DOT OR BAND; BODY COLOR ON TOLERANCE END.
3,000 OHMS ±10 PERCENT: ORANGE BODY; BLACK END; RED DOT OR BAND; SILVER END.

STD-RI

Figure 77. Resistor color code.

CAPACITOR COLOR CODE MARKING
(MIL-STD CAPACITORS)

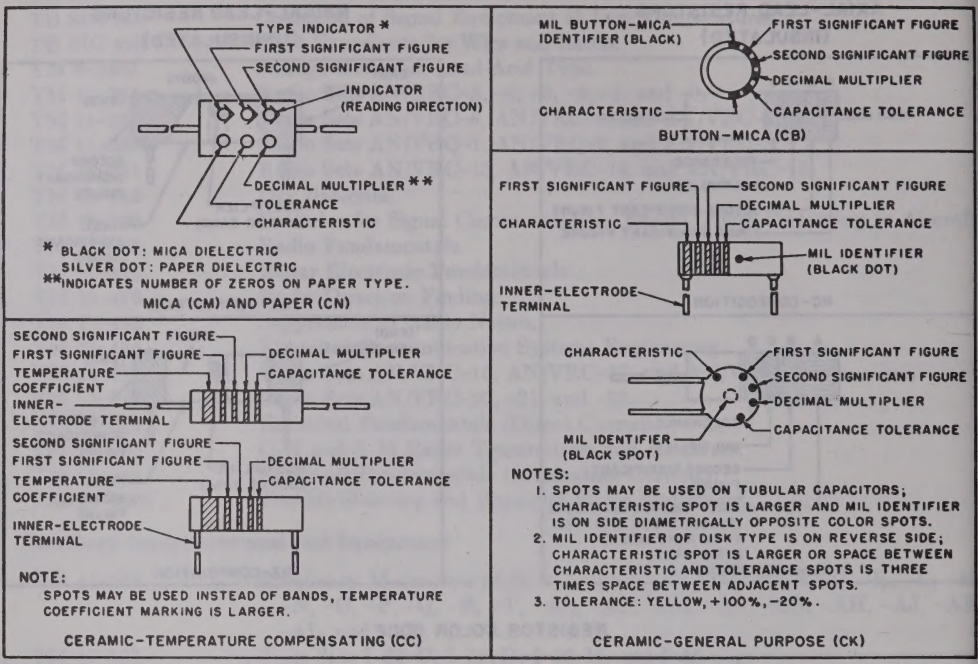

CAPACITOR COLOR CODE

COLOR	SIG FIG.	MULTIPLIER		CHARACTERISTIC[1]				TOLERANCE [2]					TEMPERATURE COEFFICIENT (UUF/UF/°C)
		DECIMAL	NUMBER OF ZEROS	CM	CN	CB	CK	CM	CN	CB	CC		
											OVER 10UUF	10UUF OR LESS	CC
BLACK	0	1	NONE		A			20	20	20	20	2	ZERO
BROWN	1	10	1	B	E	B	W				1		-30
RED	2	100	2	C	H		X	2		2	2		-80
ORANGE	3	1,000	3	D	J	D			30				-150
YELLOW	4	10,000	4	E	P								-220
GREEN	5		5	F	R						5	0.5	-330
BLUE	6		6		S								-470
PURPLE (VIOLET)	7		7		T	W							-750
GRAY	8		8			X						0.25	+30
WHITE	9		9								10	1	-330(±500) [3]
GOLD		0.1						5		5			+100
SILVER		0.01						10	10	10			

1. LETTERS ARE IN TYPE DESIGNATIONS GIVEN IN MIL-C SPECIFICATIONS.
2. IN PERCENT, EXCEPT IN UUF FOR CC-TYPE CAPACITORS OF 10 UUF OR LESS.
3. INTENDED FOR USE IN CIRCUITS NOT REQUIRING COMPENSATION.

STD-CI

Figure 78. Capacitor color code.

(*figs. 79, 80, 81, 82 located in back of manual*)

APPENDIX II

IDENTIFICATION TABLE OF PARTS

1. Requisitioning Parts

The fact that a part is listed in this table is not sufficient basis for requisitioning the item. Requisitions must cite an authorized basis, such as a specific T/O & E, T/A, SIG 7 & 8, list of allowances of expendable material, or another authorized supply basis. The Department of the Army Supply Manuals applicable to the equipment covered in this manual are SIG 7 & 8–RT–66/GRC, SIG 7 & 8–RT–67/GRC, and SIG 7 & 8–RT–68/GRC. For an index of available supply manuals in the Signal portion of the Department of the Army Supply Manual see SR 310–20–21 and the latest issue of SIG 1.

2. Identification Table of Parts for Receiver-Transmitters RT–66/GRC, RT–67/GRC, and RT–68/GRC

Note. An asterisk in columns 1 through 15 indicates that the part indicated in the *Ref symbol* column is used in the equipment represented by that column. To identify the equipments covered by columns 1 through 15, see the following chart:

Column	Model	Order No.
1	RT–66/GRC	1759–Phila–51
2	RT–66/GRC	18651–Phila–49
3	RT–66/GRC	21434–Phila–50
4	RT–66/GRC	32137–Phila–51
5	RT–66/GRC	32138–Phila–51
6	RT–67/GRC	1759–Phila–51
7	RT–67/GRC	16831–Phila–51
8	RT–67/GRC	18651–Phila–49
9	RT–67/GRC	32111–Phila–51
10	RT–68/GRC	1759–Phila–51
11	RT–68/GRC	16817–Phila–51
12	RT–68/GRC	16821–Phila–51
13	RT–68/GRC	18651–Phila–49
14	RT–68/GRC	32114–Phila–51
15	RT–68/GRC	32127–Phila–51

2. *Identification Table of Parts for Receiver-Transmitters RT–66/GRC, RT–67/GRC, and RT–68/GRC*—Continued

Ref symbol	RT–66/GRC					RT–67/GRC				RT–68/GRC						Name of part and description	Function of part	Signal Corps stock No.
	1	2	3	4	5	6	7	8	9	10	11	12	13	14	15			
	(*)	(*)	(*)	(*)	(*)											RECEIVER-TRANSMITTER RT–66/GRC: vehicular, gnd; fm; xmtr output approx 22 w max; freq range of both rec and xmtr 20–27.9 mc in 1 band; nom input 5.6, 6.3, –27, 85, 105, 150, 250, and 450 v dc; mtd in rigidized metal case, 11¼" wd x 9¼" h x 12⅞" d o/a; w/2 mtg rails on bottom; immersion and fungus resistant; self-luminous dial and control knob markings; p/o Radio Sets AN/GRC–3, AN/GRC–4, AN/VRQ–1, and AN/VRC–8; Fed Tele & Rad part/dwg #GA–2514–14–GR I; US Army spec #71–3320.	----------	2C5130–66
						(*)	(*)	(*)	(*)							RECEIVER-TRANSMITTER RT–67/GRC: vehicular, gnd; fm; xmtr output approx 12 w max; freq range of botl. rec and xmtr 27–38.9 mc in 1 band; nom input 5.6, 6.3, –27, 85, 105, 250, and 450 v dc; mtd in rigidized metal case, 11¼" wd x 9¼" h x 12⅞" d o/a; w/2 mtg rails on bottom; immersion and fungus resistant; self-luminous dial and control knob markings; p/o Radio Sets AN/GRC–5, AN/GRC–6, AN/VRQ–2, and AN/VRC–9; Fed Tele & Rad part/dwg #GA–2514–14–GR II; US Army spec #71–3320.	----------	2C5130-67
										(*)	(*)	(*)	(*)	(*)	(*)	RECEIVER-TRANSMITTER RT–68/GRC: vehicular, gnd; fm; xmtr output approx 22 w max; freq range of both rec and xmtr 38–54.9 mc in 1 band; nom input 5.6, 6.3, –27, 85, 105, 150, 250, and 450 v dc; mtd in rigidized metal case, 11¼" wd x 9¼" h x 12⅞" d o/a; w/2 mtg rails on bottom; immersion and fungus resistant; self-luminous dial and control knob markings; p/o Radio Sets AN/GRC–7, AN/GRC–8, AN/VRQ–3, and AN/VRC–10; Fed Tele & Rad part/dwg #GA–2514–14–GR III; US Army spec #71–3320.	----------	2C5130-68

| | | |

2. *Identification Table of Parts for Receiver-Transmitters RT–66/GRC, RT–67/GRC, and RT–68/GRC*—Continued

Ref symbol	RT–66/GRC					RT–67/GRC				RT–68/GRC						Name of part and description	Function of part	Signal Corps stock No.
	1	2	3	4	5	6	7	8	9	10	11	12	13	14	15			
E119			(*)													BOARD, terminal: 23 solder type term.; lam phenolic board w/formed mtg bkt 5⅝″ lg x 2¼″ wd x ⅝″ thk o/a; two .187″ dia mtg holes, on 3.937″ mtg/c; p/o Lewyt #LGA–2290–14 i-f chassis assy; Lewyt part/dwg #LGA–2035–2.	Capacitor and resistor mounting board.	3Z770–28.15
O2	(*)	(*)	(*)	(*)	(*)											CAM: var; c/o 1 Fed Tele & Rad #GC–1511–12 rotor, 6 #GH–1432–2 links, 1 ea #GB–1439–2–1 and #GB–1440–2–1 links, 9 ea #GB–1501–2 studs and #GC–15032–2 holders, 9 adj screws and miscellaneous washers, groove pins, retainer rings, and set screws; round shape; approx 2.156″ dia x 1.093″ lg o/a; .251″ dia mtg hole; mts on ¼″ dia shaft by means of two #8–32 set screws; 8 sect. link type hinged cam track adj by means of adj screws; Fed Tele & Rad part/dwg #GA–1518–14, group 1.	Antenna tuning capacitor (C74) adjustment.	2Z1600–100
O2						(*)	(*)	(*)	(*)							CAM: var; c/o Fed Tele & Rad #GC–1512–12 rotor, 10 #GB–1437–2 links, 1 ea #GB–1439–2–2 and #GB–1440–2–2 links, 13 ea #GB–1501–2 studs and #GC–1503–2 holders; 13 adj screws and miscellaneous washers, groove pins, retainer rings, and set screws; round shape; approx 2.156″ dia x 1.093″ lg o/a; .251″ dia mtg hole; mts on ¼″ dia shaft by means of two #8–32 set screws; 12 sect. link type hinged cam track adj by means of adj screws; Fed Tele & Rad part/dwg #GA–1518–14, group 2.	Antenna tuning capacitor (C74) adjustment.	2Z1600–99
O2										(*)	(*)	(*)	(*)	(*)	(*)	CAM: var; c/o 1 Fed Tele & Rad #GC–1513–2 rotor, 15 #GB–1438–2 links, 1 ea #GB–1439–2–3 and #GB–1440–2–3 links, 18 ea #GB–1501–2 studs and #GC–1503–2 holders, 18 adj screws and miscellaneous washers, groove pins, retainer rings, and set screws; round shape; approx 2.156″ dia x 1.093″ lg o/a; .251″ dia mtg hole; mts on ¼″ shaft by means of two #8–32 set	Antenna tuning capacitor (C74) adjustment.	2Z1600–101

| | | |

2. *Identification Table of Parts for Receiver-Transmitters RT–66/GRC, RT–67/GRC, and RT–68/GRC*—Continued

Ref symbol	RT–66/GRC					RT–67/GRC				RT–68/GRC						Name of part and description	Function of part	Signal Corps stock No.
	1	2	3	4	5	6	7	8	9	10	11	12	13	14	15			
C126	(*)	(*)	(*)	(*)	(*)	(*)	(*)	(*)	(*)	(*)	(*)	(*)	(*)	(*)	(*)	CAPACITOR, fixed: ceramic dielectric; 24 $\mu\mu$f ±10%; 500 vdcw; JAN type CC21TH240K.	V104A voltage divider, part of T103.	3D9024–46
C37,	(*)	(*)	(*)	(*)	(*)											CAPACITOR, fixed: ceramic dielectric; 24 $\mu\mu$f ±10%; 500 vdcw; JAN type CC21UJ240K. (For column 4, only sets serial numbered 7074 and below contain component described above for C137 and C138.)	C7: V1 plate circuit tuning.	3D9024–44
C137,		(*)		(*)	(*)	(*)		(*)	(*)	(*)		(*)	(*)				C137: V105 pre-emphasis.	
C138,		(*)		(*)	(*)		(*)	(*)	(*)		(*)	(*)	(*)				C138: V106 pre-emphasis.	
C75,						(*)											C75: Antenna coupling.	
C35										(*)	(*)	(*)	(*)	(*)	(*)		C35: V5 plate circuit tuning.	
C187,	(*)	(*)	(*)	(*)	(*)	(*)	(*)	(*)	(*)	(*)	(*)	(*)	(*)	(*)	(*)	CAPACITOR, fixed: ceramic dielectric; 30 $\mu\mu$f ±10%; 500 vdcw; JAN type CC20SH300K.	C187: V113 and V114 discriminator tuning, part of T7113.	3D9030–61
C188,	(*)	(*)	(*)	(*)	(*)	(*)	(*)	(*)	(*)	(*)	(*)	(*)	(*)	(*)	(*)		C188: V113 discriminator tuning, part of T113.	
C189	(*)	(*)	(*)	(*)	(*)	(*)	(*)	(*)	(*)	(*)	(*)	(*)	(*)	(*)	(*)		C189: V114 discriminator tuning, part of T113.	
C167,	(*)	(*)	(*)	(*)	(*)	(*)	(*)	(*)	(*)	(*)	(*)	(*)	(*)	(*)	(*)	CAPACITOR, fixed: ceramic dielectric; 30 $\mu\mu$f ±10%; 500 vdcw; JAN type CC21TH300K.	C167: V109 plate circuit tuning, part of T110.	3D9030–46
C168,	(*)	(*)	(*)	(*)	(*)	(*)	(*)	(*)	(*)	(*)	(*)	(*)	(*)	(*)	(*)		C168: V110 grid circuit tuning, part of T110.	
C172,	(*)	(*)	(*)	(*)	(*)	(*)	(*)	(*)	(*)	(*)	(*)	(*)	(*)	(*)	(*)		C172: V110 plate circuit tuning, part of T111.	
C175,	(*)	(*)	(*)	(*)	(*)	(*)	(*)	(*)	(*)	(*)	(*)	(*)	(*)	(*)	(*)		C175: V111 grid circuit tuning, part of T111.	
C181,	(*)	(*)	(*)	(*)	(*)	(*)	(*)	(*)	(*)	(*)	(*)	(*)	(*)	(*)	(*)		C181: V111 plate circuit tuning, part of T112.	
C182	(*)	(*)	(*)	(*)	(*)	(*)	(*)	(*)	(*)	(*)	(*)	(*)	(*)	(*)	(*)		C182: V112 grid circuit tuning, part of T112.	
C156,	(*)	(*)	(*)	(*)	(*)	(*)	(*)	(*)	(*)	(*)	(*)	(*)	(*)	(*)	(*)	CAPACITOR, fixed: ceramic dielectric; 30 $\mu\mu$f ±10%; 500 vdcw; JAN type CC25LH300K.	V108 plate circuit tuning	3D9030–62
C160	(*)	(*)	(*)	(*)	(*)	(*)	(*)	(*)	(*)	(*)	(*)	(*)	(*)	(*)	(*)			
C169,	(*)	(*)	(*)	(*)	(*)	(*)	(*)	(*)	(*)	(*)	(*)	(*)	(*)	(*)	(*)	CAPACITOR, fixed: ceramic dielectric; 47 $\mu\mu$f ±10%; 500 vdcw; JAN type CC30RH470K.	C169: V110 grid coupling, part of T110.	3D9047–53
C176,	(*)	(*)	(*)	(*)	(*)	(*)	(*)	(*)	(*)	(*)	(*)	(*)	(*)	(*)	(*)		C176: V110 grid coupling, part of T111.	
C183	(*)	(*)	(*)	(*)	(*)	(*)	(*)	(*)	(*)	(*)	(*)	(*)	(*)	(*)	(*)		C183: V112 grid coupling, part of T112.	
C3,	(*)	(*)	(*)	(*)	(*)	(*)	(*)	(*)	(*)	(*)	(*)	(*)	(*)	(*)	(*)	CAPACITOR, fixed: ceramic dielectric; 51 $\mu\mu$f ±10%; 500 vdcw; JAN type CC21UK510K.	C3: V1 grid coupling	3D9051–8
C13,	(*)	(*)	(*)	(*)	(*)	(*)	(*)	(*)	(*)	(*)	(*)	(*)	(*)	(*)	(*)		C13: V3 filament voltage divider.	
C25,	(*)	(*)	(*)	(*)	(*)	(*)	(*)	(*)	(*)								C25: V4 padder.	
C29,	(*)	(*)	(*)	(*)	(*)	(*)	(*)	(*)	(*)	(*)	(*)	(*)	(*)	(*)	(*)			

| | | |

2. *Identification Table of Parts for Receiver-Transmitters RT–66/GRC, RT–67/GRC, and RT–68/GRC*—Continued

Ref symbol	RT–66/GRC					RT–67/GRC				RT–68/GRC						Name of part and description	Function of part	Signal Corps stock No.
	1	2	3	4	5	6	7	8	9	10	11	12	13	14	15			
C123	(*)	(*)	(*)	(*)	(*)	(*)	(*)	(*)	(*)	(*)	(*)	(*)	(*)	(*)	(*)	CAPACITOR, fixed: ceramic dielectric; 330 $\mu\mu$f $\pm$10%; 500 vdcw; JAN type CC45TH331K.	V104A padder	3D9330–23
C5,	(*)	(*)	(*)	(*)	(*)	(*)	(*)	(*)	(*)	(*)	(*)	(*)	(*)	(*)	(*)	CAPACITOR, fixed: ceramic dielectric; 500 $\mu\mu$f $\pm$20%; var temp coef; 500 vdcw; .46" lg x .24" dia; radial wire leads; dipped phenolic ins; Erie type #331 Hi–K Ceramicon; Fed Tele & Rad part/dwg #GH–2094–2–2.	C5: V1 screen bypass	3D9500–237
C6,	(*)	(*)	(*)	(*)	(*)	(*)	(*)	(*)	(*)								C6: V1 padder.	
C9,	(*)	(*)	(*)	(*)	(*)	(*)	(*)	(*)	(*)	(*)	(*)	(*)	(*)	(*)	(*)		C9: Coupling to V2.	
C15,	(*)	(*)	(*)	(*)	(*)	(*)	(*)	(*)	(*)	(*)	(*)	(*)	(*)	(*)	(*)		C15: V3 d-c blocking.	
C22,	(*)	(*)	(*)	(*)	(*)	(*)	(*)	(*)	(*)	(*)	(*)	(*)	(*)	(*)	(*)		C22: V4 meter bypass.	
C25,										(*)	(*)	(*)	(*)	(*)	(*)		C25: V4 d-c blocking.	
C30,	(*)	(*)	(*)	(*)	(*)	(*)	(*)	(*)	(*)	(*)	(*)	(*)	(*)	(*)	(*)		C30: V5 filament bypass.	
C31,	(*)	(*)	(*)	(*)	(*)	(*)	(*)	(*)	(*)	(*)	(*)	(*)	(*)	(*)	(*)		C31: V5 filament bypass.	
C32,	(*)	(*)	(*)	(*)	(*)	(*)	(*)	(*)	(*)	(*)	(*)	(*)	(*)	(*)	(*)		C32: V5 d-c blocking.	
C43,	(*)	(*)	(*)	(*)	(*)	(*)	(*)	(*)	(*)	(*)	(*)	(*)	(*)	(*)	(*)		C43: V5 meter bypass.	
C63,		(*)	(*)	(*)	(*)		(*)	(*)	(*)								C63: V10 meter bypass.	
C64,		(*)	(*)	(*)	(*)		(*)	(*)	(*)								C64: V9 meter bypass.	
C136,	(*)	(*)	(*)	(*)	(*)	(*)	(*)	(*)	(*)	(*)	(*)	(*)	(*)	(*)	(*)		C136: V105 meter bypass.	
C139,	(*)	(*)	(*)	(*)	(*)	(*)	(*)	(*)	(*)	(*)	(*)	(*)	(*)	(*)	(*)		C139: V104B meter bypass.	
C162,	(*)	(*)	(*)	(*)	(*)	(*)	(*)	(*)	(*)	(*)	(*)	(*)	(*)	(*)	(*)		C162: V109 meter filter.	
C170,	(*)	(*)	(*)	(*)	(*)	(*)	(*)	(*)	(*)	(*)	(*)	(*)	(*)	(*)	(*)		C170: V110 meter filter, part of T110.	
C177,	(*)	(*)	(*)	(*)	(*)	(*)	(*)	(*)	(*)	(*)	(*)	(*)	(*)	(*)	(*)		C177: V111 meter filter, part of T111.	
C184,	(*)	(*)	(*)	(*)	(*)	(*)	(*)	(*)	(*)	(*)	(*)	(*)	(*)	(*)	(*)		C184: V112 meter filter, part of T112.	
C67,						(*)	(*)	(*)	(*)								C67: V11 input coupling bypass.	
C76,						(*)	(*)	(*)	(*)	(*)	(*)	(*)	(*)	(*)	(*)		C76: V1 grid bypass.	
C41,										(*)	(*)	(*)	(*)	(*)	(*)		C41: V6 filament bypass.	
C42,										(*)	(*)	(*)	(*)	(*)	(*)		C42: V6 filament bypass.	
C44,										(*)	(*)	(*)	(*)	(*)	(*)		C44: V6 screen bypass.	
C46,										(*)	(*)	(*)	(*)	(*)	(*)		C46: V7 and V8 filament bypass.	
C49,										(*)	(*)	(*)	(*)	(*)	(*)		C49: V7 filament bypass.	
C53,										(*)	(*)	(*)	(*)	(*)	(*)		C53: V7 and V8 screen bypassss.	
C58,										(*)	(*)	(*)	(*)	(*)	(*)		C58: V9 and V10 decoupling bypass.	
C59,										(*)	(*)	(*)	(*)	(*)	(*)		C59: V9 and V10 decoupling bypass.	
C60,										(*)	(*)	(*)	(*)	(*)	(*)		C60: V9 filament bypass.	
C61,										(*)	(*)	(*)	(*)	(*)	(*)			
C62,										(*)	(*)	(*)	(*)	(*)	(*)			
C72,										(*)	(*)	(*)	(*)	(*)	(*)			
C51,										(*)	(*)	(*)	(*)	(*)	(*)			

| | | |

2. *Identification Table of Parts for Receiver-Transmitters RT–66/GRC, RT–67/GRC, and RT–68/GRC*—Continued

Ref symbol	RT-66/GRC					RT-67/GRC				RT-68/GRC						Name of part and description	Function of part	Signal Corps stock No.
	1	2	3	4	5	6	7	8	9	10	11	12	13	14	15			
																CAPACITOR, fixed—Continued		
C198,	(*)	(*)	(*)	(*)	(*)	(*)	(*)	(*)	(*)	(*)	(*)	(*)	(*)	(*)	(*)		C198: V115 input coupling.	
C301,	(*)	(*)	(*)	(*)	(*)	(*)	(*)	(*)	(*)	(*)	(*)	(*)	(*)	(*)	(*)		C301: Filament bypass, J309. terminal N.	
C304,	(*)	(*)	(*)	(*)	(*)	(*)	(*)	(*)	(*)	(*)	(*)	(*)	(*)	(*)	(*)		C304: Meter bypass.	
C72,						(*)	(*)	(*)	(*)								C72: V11 screen bypass.	
C10										(*)	(*)	(*)	(*)	(*)	(*)		C10: V2 screen bypass.	
C208	(*)		(*)	(*)	(*)	(*)										CAPACITOR, fixed: ceramic dielectric; 2,000 $\mu\mu$f $\pm$20%; var temp coef; 500 vdcw.	Audio connector J311 first audio r-f bypass.	CN20A–202M
C4,		(*)														CAPACITOR, fixed: ceramic dielectric; 3,000 $\mu\mu$f $\pm$20%; var temp coef; 500 vdcw; .937" lg x .312" dia; radial wire leads; dipped phenolic ins; Erie type #337 Hi–K Ceramicon; Fed Tele & Rad part/dwg #GH–2094–5. (For column 2, only later sets contain the component described above for C4.)	C4: V1 decoupling, bypass.	3DA3–137
C10,	(*)	(*)	(*)	(*)	(*)	(*)	(*)	(*)	(*)								C10: V2 screen bypass.	
C45,	(*)	(*)	(*)	(*)	(*)	(*)	(*)	(*)	(*)	(*)	(*)	(*)	(*)	(*)	(*)		C45: V6 plate circuit decoupling.	
C56,	(*)	(*)	(*)	(*)	(*)	(*)	(*)	(*)	(*)	(*)	(*)	(*)	(*)	(*)	(*)		C56: V7 plate circuit decoupling.	
C66,	(*)	(*)	(*)	(*)	(*)	(*)	(*)	(*)	(*)	(*)	(*)	(*)	(*)	(*)	(*)		C66: V9 plate circuit decoupling.	
C69,		(*)															C69: Grid bypass filter for V11.	
C76,	(*)	(*)	(*)	(*)	(*)												C76: V1 grid bypass.	
C112,	(*)	(*)	(*)	(*)	(*)	(*)	(*)	(*)	(*)	(*)	(*)	(*)	(*)	(*)	(*)		C112: V102 meter bypass.	
C116,	(*)	(*)	(*)	(*)	(*)	(*)	(*)	(*)	(*)	(*)	(*)	(*)	(*)	(*)	(*)		C116: V103 filament bypass.	
C131,	(*)	(*)	(*)	(*)	(*)	(*)	(*)	(*)	(*)	(*)	(*)	(*)	(*)	(*)	(*)		C131: V105 and V106 grid lead capacitor, part o T104.	
C132,	(*)	(*)	(*)	(*)	(*)	(*)	(*)	(*)	(*)	(*)	(*)	(*)	(*)	(*)	(*)		C132: Screen grid bypass and filter for V106.	
C133,	(*)	(*)	(*)	(*)	(*)	(*)	(*)	(*)	(*)	(*)	(*)	(*)	(*)	(*)	(*)		C133: Screen grid bypass and filter for V105.	
C134,	(*)	(*)	(*)	(*)	(*)	(*)	(*)	(*)	(*)	(*)	(*)	(*)	(*)	(*)	(*)		C134: V105 filament bypass.	
C135,	(*)	(*)	(*)	(*)	(*)	(*)	(*)	(*)	(*)	(*)	(*)	(*)	(*)	(*)	(*)		C135: V106 filament bypass.	
C146,	(*)	(*)	(*)	(*)	(*)	(*)	(*)	(*)	(*)	(*)	(*)	(*)	(*)	(*)	(*)		C146: V2 decoupling, bypass.	
C150,	(*)	(*)	(*)	(*)	(*)	(*)	(*)	(*)	(*)	(*)	(*)	(*)	(*)	(*)	(*)		C150: V107 screen bypass.	
C155,	(*)	(*)	(*)	(*)	(*)	(*)	(*)	(*)	(*)	(*)	(*)	(*)	(*)	(*)	(*)		C155: V108 screen bypass.	
C158,	(*)	(*)	(*)	(*)	(*)	(*)	(*)	(*)	(*)	(*)	(*)	(*)	(*)	(*)	(*)		C158: V108 plate circuit bypass, part of T109.	
C166,	(*)	(*)	(*)	(*)	(*)	(*)	(*)	(*)	(*)	(*)	(*)	(*)	(*)	(*)	(*)		C166: V109 screen bypass.	
C171,	(*)	(*)	(*)	(*)	(*)	(*)	(*)	(*)	(*)	(*)	(*)	(*)	(*)	(*)	(*)			
C173,	(*)	(*)	(*)	(*)	(*)	(*)	(*)	(*)	(*)	(*)	(*)	(*)	(*)	(*)	(*)			

| | | |

2. *Identification Table of Parts for Receiver-Transmitters RT–66/GRC, RT–67/GRC, and RT–68/GRC*—Continued

Ref symbol	RT-66/GRC					RT-67/GRC				RT-68/GRC						Name of part and description	Function of part	Signal Corps stock No.
	1	2	3	4	5	6	7	8	9	10	11	12	13	14	15			
C303		(*)														CAPACITOR, fixed: mica dielectric; 220 μμf ±10%; 500 vdcw; JAN type CM20-B221K. (For column 2, only early sets contain the component described above for C303)	S301 meter bypass	3K2022121
C199	(*)	(*)	(*)	(*)	(*)		(*)	(*)			(*)	(*)	(*)			CAPACITOR, fixed: mica dielectric; 240 μμf ±5%; 500 vdcw; JAN type CM20-B241J. (For columns 11 and 12, only sets serial numbered below 9676 and 16668, respectively, contain the component described above for C199).	V113 decoupling bypass	3K2024122
C199						(*)			(*)	(*)	(*)	(*)		(*)	(*)	CAPACITOR, fixed: mica dielectric; 750 μμf ±5%; 500 vdcw; JAN type CM25-B751J. (For columns 11 and 12, only sets serial numbered above 9675 and 16667, respectively, contain the component described above for C199.)	V113 decoupling bypass	3K2575122
C193, C197	(*) (*)	(*) (*)	(*) (*)	(*) (*)	(*) (*)	(*)	(*) (*)	(*) (*)	(*) (*)	(*)	(*) (*)	(*) (*)	(*) (*)	(*)	(*)	CAPACITOR, fixed: mica dielectric; 270 μμf ±10%; 500 vdcw; JAN type CM20-B271K. (For columns 11 and 12, only sets serial numbered below 9675 and 16667, respectively, contain the component described above for C197.)	C193: V112 and V114 diode load filter. C197: V115 de-emphasis network.	3K2027121
C80										(*)			(*)	(*)	(*)	CAPACITOR, fixed: mica dielectric; 470 μμf ±20%; 500 vdcw; JAN type CM20-BA71M.	VII tank circuit padder	3K2047124
C206	(*)		(*)	(*)	(*)	(*)	(*)	(*)	(*)	(*)	(*)	(*)	(*)	(*)	(*)	CAPACITOR, fixed: mica dielectric; 910 μμf ±2%; 500 vdcw; JAN type CM25D-911G.	Tuning, 1,600-cycle oscillator.	3K259113
C143	(*)		(*)	(*)	(*)	(*)	(*)	(*)	(*)	(*)	(*)	(*)	(*)	(*)	(*)	CAPACITOR, fixed: ceramic dielectric; 910 μμf ±5%; 300 vdcw; per Fed Tele & Rad part/dwg #CH3803–12.	Tuning, 1,600-cycle oscillator.	3D9910–4
C206		(*)														CAPACITOR, fixed: mica dielectric; 1500 μμf ±10%; 500 vdcw; JAN type CM30A152K.	Tuning, 1600-cycle, oscillator.	3K3015211
C303	(*)	(*)	(*)	(*)	(*)			(*)								CAPACITOR, fixed: mica dielectric; 470 μμf ±10%; 500 vdcw; JAN type CM20A471K. (For columns 2 and 3, only later sets contain the component described above for C303.)	Meter decoupling bypass	3K2047111

| | | |

2. *Identification Table of Parts for Receiver-Transmitters RT–66/GRC, RT–67/GRC, and RT–68/GRC*—Continued

Ref symbol	RT–66/GRC					RT–67/GRC				RT–68/GRC						Name of part and description	Function of part	Signal Corps stock No.
	1	2	3	4	5	6	7	8	9	10	11	12	13	14	15			
																CAPACITOR, fixed—Continued		
C200, C202, C205, C140	(*)	(*)	(*)	(*)	(*)	(*)	(*)	(*)	(*)	(*)	(*)	(*)	(*)	(*)	(*)		C200: V115 filter bypass. C202: Relay O101 bypass. C205: V103 decoupling, bypass. C140: V104B ringer oscillator, d-c blocking.	
C78	(*)	(*)	(*)	(*)	(*)	(*)	(*)	(*)	(*)	(*)	(*)	(*)	(*)	(*)	(*)	CAPACITOR, fixed: paper dielectric; 10,000 μμf ±20%; 600 vdcw; JAN type CN35A103M. (For column 2, only later sets contain the component described above for C78.)	Squelch timing	3DA10–367
C203	(*)	(*)	(*)	(*)	(*)	(*)	(*)	(*)	(*)	(*)	(*)	(*)	(*)	(*)	(*)	CAPACITOR, fixed: paper dielectric; 50,000 μμf ±20%; 300 vdcw; JAN type CN42A503M.	V115 decoupling bypass	3DA50–435
C194	(*)	(*)	(*)	(*)	(*)	(*)	(*)	(*)		(*)	(*)	(*)	(*)	(*)	(*)	CAPACITOR, fixed: paper dielectric; 3 sect.; ea sect. .1 μf +20% −10%; 600 vdcw; JAN type CP69B5EF104V.	V113 and V114 i-f bypass	3DA100–673
C194									(*)							CAPACITOR, fixed: paper dielectric; 3 sect.; ea sect. .1 μf ±20%; 600 vdcw; JAN type 69B5EF104M.	V113 and V114 i-f bypass	3DA100–753
C141		(*)														CAPACITOR, fixed: paper dielectric; .22 μf ±20%; 200 vdcw; HS metal can; .4″ OD x 1⅜″ lg; wax impr; 2 axial wire lead term. at end of can; mts by 2 axial wire leads 1¼″ lg; Sprague #188P22402 or equal; Fed Tele & Rad part/dwg #GH–2355–12.	V104B plate bypass	3DA220–9
C1	(*)	(*)	(*)	(*)	(*)	(*)	(*)	(*)	(*)	(*)	(*)	(*)	(*)	(*)	(*)	CAPACITOR, variable: air dielectric; plate meshing type; 6 sect.; sect. B, 8–66 μμf; sect. J and H, 13.5-100 μμf; sect. D, 10–67 μμf; sect. F, 9–74 μμf; sect. L, 8–57 μμf; all sect. SLF characteristics; 1,000 v rms test; 5¼″ lg x 4⅝″ wd x 3⅛″ h; 2 rotor shafts geared to drive shaft ¼″ dia x 1⅞″ lg; lg drive shaft; scdr adj on 5 trimmers, shaft, w/worm gear drive adj on 6th; sect. B, D, and L, 13 cad pl steel plates; sect. F, 15 cad pl steel plates; sect. J and H, 17 cad pl steel plates; 170° ccw rotation; ceramic ins; 6 trimmer sect.;	Section A and B: V1, r-f tuning (input). Section C and D: V1, r-f tuning (output). Section E and F: V6, r-f tuning. Section G and H: V7 and V8, r-f tuning. Section J and K: V9 and V10, r-f tuning. Section L and M: V11, r-f tuning.	3D9088V–1

| | | |

2. Identification Table of Parts for Receiver-Transmitters RT–66/GRC, RT–67/GRC, and RT–68/GRC—Continued

Ref symbol	RT-66/GRC					RT-67/GRC				RT-68/GRC						Name of part and description	Function of part	Signal Corps stock No.
	1	2	3	4	5	6	7	8	9	10	11	12	13	14	15			
C65	(*)	(*)	(*)	(*)	(*)	(*)	(*)	(*)	(*)	(*)	(*)	(*)	(*)	(*)	(*)	CAPACITOR, variable: air dielectric; neutralizing; concentric type; .3–3 μμf; 1500 v ac peak; 1″ lg x 5/16″ dia exclùding adj screw and term.; term. are single pigtail lead and mtg stud; one #12–24 x 7/32″ lg mtg stud; glass ins; adj screw w/scdr slot; mtg stud 7/32″ lg flatted on 1 side to fit .183″ wd x .223″ lg "D" hole; Corning Glass code #690082 or equal; Fed Tele & Rad part/dwg #GH–1989–2–2.	V9 and V10 trimmer	3D9003V–19
C101	(*)	(*)	(*)	(*)	(*)	(*)	(*)	(*)	(*)	(*)	(*)	(*)	(*)	(*)	(*)	CAPACITOR, variable: air dielectric; plate meshing type; 6 sect.; sect. B, E, G, J, and L, ea 8–55.3 μμf; sect. C, 7.5–64 μμf; all sect. SLF characteristics; 1000 v rms test; 4 7/16″ lg x 4.23″ wd x 2.83″ h, 2 shafts 3/8″ dia x 1 1/16″ lg; scdr adj; sect. B, E, G, J, and L; 11 cad pl steel plates; sect. C, 13 cad pl steel plates; 170° ccw rotation; ceramic ins; 6 trimmer sect.; sect. A, D, F, H, K, and M; ea sect. 3.7–23 μμf; lug term.; 3 mtg feet w/#6–32 mtg holes on 2 5/8″ x 4 1/2″ mtg/c 2 rotor shafts geared together; RCC part CN–800233; Fed Tele & Rad part/dwg #GH–1056–14.	Section A and B: V101, i-f tuning. Section C and D: V104A, i-f tuning. Section E and F: V2, i-f tuning. Section G and H: V107, i-f tuning. Section J and K: V108, i-f tuning. Section L and M: V109, i-f tuning.	3D9067VE6
C16 C26 C33	(*) (*) (*)	(*) (*) (*)	(*) (*) (*)	(*) (*) (*)	(*) (*) (*)	(*) (*) (*)	(*) (*) (*)	(*) (*) (*)	(*) (*) (*)	(*) (*) (*)	(*) (*) (*)	(*) (*) (*)	(*) (*) (*)	(*) (*) (*)	(*) (*) (*)	CAPACITOR, variable: ceramic; 3–12 μμf; 500 vdcw; JAN type CV11A120.	C16: V3 trimmer C26: V4 trimmer. C33: V5 trimmer.	3D9012V–19
O302	(*)	(*)	(*)	(*)	(*)											CHANNEL SELECTOR GEAR HEAD ASSEMBLY: c/o 1 Atlas Metal Stamping Co #BL–44830 housing assy, 1 ea #BA–43951, #BA–44165, #BA–44166, #BA–49590, #BA–49591, and #BL–44970 gear assy, 1 #BA–44965 support assy, 2 #BA–44171 spring assy, 1 ea #BA–38122 and #BA–38124 dial, and miscellaneous bearings, shafts, gears, plungers, and other small parts; rectangular w/1 rounded end; approx 8 5/8″ lg x 4 7/8″ wd x 3 1/8″ thk o/a; 5 mtg feet around outer edge of front side ea w/one .188″ dia mtg hole, 2 on 1 lengthwise edge on 3 3/8″ ctr, 3 on	Dial drive assembly	2C5130–66–1

| | | |

2. *Identification Table of Parts for Receiver-Transmitters RT–66/GRC, RT–67/GRC, and RT–68/GRC*—Continued

Ref symbol	RT–66/GRC					RT–67/GRC				RT–68/GRC						Name of part and description	Function of part	Signal Corps stock No.
	1	2	3	4	5	6	7	8	9	10	11	12	13	14	15			
																CHANNEL SELECTOR GEAR HEAD ASSEMBLY—Continued 0–9, all markings luminous; 3 couplings and 1 notched gear extend from rear; Atlas Metal Stamping Co dwg #GA–2522–14–3; Fed Tele & Rad part/dwg #GA–2522–14–GRIII.		
O3	(*)	(*)	(*)	(*)	(*)	(*)	(*)	(*)	(*)	(*)	(*)	(*)	(*)	(*)	(*)	CLIP: spring brass, cad pl; ⅞″ lg x ⅜″ h x 7/16″ wd o/a; unins; 1 solder lug and wire clamping ears; fits ⅜″ dia receiving tube grid cond; spring loop type cont; Natl Co. cat. #24.	Tube grid contact cap	2Z2724
L14, L15		(*)		(*)	(*)		(*)	(*)								COIL, RF: choke; single layer close wnd; unshielded; 5.3 μh at 1000 cyc, 7.5 ohms dc resistance; 21 turns #33 AWG wire ⅝″ lg x 1¾4″ diaμ; powdered iron core; two 1½″ lg axial wire leads; coated w/fungicidal varnish; Muter #C–7302; Fed Tele & Rad part/dwg #GN–1848–2.	L14: V7 filament choke L15: V8 filament choke.	3C345–2
L20		(*)	(*)	(*)	(*)											COIL, RF: choke; single layer close wnd; unshielded; 8.1 μh at 1000 cyc, .23 ohm dc resistance; 58 turns #26 formex wire; 1¾″ lg x 5/16″ dia excluding term.; ceramic core; mts by 5/16″ ID of core; 2 solder lug term. extend perpendicular to core at ends of core, ea w/1/16″ dia hole; coated w/fungicidal varnish; Muter #C–7310; Fed Tele & Rad part/dwg #GN–1849–2.	V11 filament choke	3C345–6
L2, L21	(*)	(*)	(*)	(*)	(*)	(*)	(*)	(*)	(*)	(*)	(*)	(*)	(*)	(*)	(*)	COIL, RF: choke; single layer close wnd; unshielded; 27.9 μh at 1000 cyc, 1.13 ohms dc resistance; 65 turns #33 AWG wire; ⅝″ lg x 5/16″ dia; phenolic form w/powdered iron core; two 1½″ lg axial wire leads; marked 30 μh; phenolic resin coated, wax impr; Muter #C–7305–1; Fed Tele & Rad part/dwg #GN–1314–12–1.	L2: V1 REC RF AMPLR plate load. L21: V11 plate decoupling choke.	3C345–3
L4, L5, L122, L135, L136	(*)	(*)	(*)	(*)	(*)	(*)	(*)	(*)	(*)	(*)	(*)	(*)	(*)	(*)	(*)	COIL, RF: choke, single wdg, progressively universal wnd; unshielded; 45 μh at 1000 cyc, .82 ohm dc resistance; 75 turns #32 AWG wire; ⅝″ lg x 5/16″ dia; powdered iron core; two 1½″ lg axial	L4: V3 filament choke L5: V3 filament choke. L122: V109 filament choke. L135: V113 filament choke. L136: V114 filament choke.	3C345–4

| | | |

2. *Identification Table of Parts for Receiver-Transmitters RT–66/GRC, RT–67/GRC, and RT–68/GRC*—Continued

Ref symbol	RT-66/GRC 1	2	3	4	5	RT-67/GRC 6	7	8	9	RT-68/GRC 10	11	12	13	14	15	Name of part and description	Function of part	Signal Corps stock No.
																COIL, RF—Continued opposite corners of base on .608″ x .858″ mtg/c; 6 solder term. on bottom; marked GA–1678–12 on side of can; tropicalized; Fed Tele & Rad part/dwg #GA–1678–12.		
T8	(*)	(*)	(*)	(*)	(*)											COIL, RF: 2 wdg, single layer wnd; unshielded; 6¾ turns #18 (.040″) wire ea wdg; 1 1/16″ wd x 1¾″ lg x 2⅜″ h o/a; ceramic form mtd on phenolic plate, powdered iron core; form 1 15/32″ lg x .650″ dia o/a; adj iron core and adj capacitor tuning; scdr adj at ends of coil and capacitor; two .169″ mtg holes on diagonally opposite corners of phenolic plate on 1.250″ x 1.250″ mtg/c; 6 solder type term. on bottom of phenolic plate; stamped w/circuit symbol T–8 and w/term. markings 8A, 8B, 8C, 8D, 8E, and 8F on bottom of phenolic plate; tropicalized; Fed Tele & Rad part/dwg #GA–2544–12–GR I.	V9 transmitter driver coil	2Z9629–242
T8						(*)	(*)	(*)	(*)							COIL, RF: 2 wdg, single layer wnd; unshielded; 4¾ turns #18 (.040″) wire ea wdg; 1 1/16″ wd x 1¾″ lg x 2⅜″ h o/a; ceramic form mtd on phenolic plate, powdered iron core; form 1 15/32″ 19 x 650″ diam o/a; adj iron core and adj capacitor tuning; scdr adj at ends of coil and capacitor; two .169″ mtg holes on diagonally opposite corners of phenolic plate on 1.250″ x 1.250″ mtg/c; 6 solder type term. on bottom of phenolic plate; stamped w/circuit symbol T–8 and w/term. markings 8A, 8B, 8C, 8D, 8E, and 8F on bottom of phenolic plate; tropicalized; Fed Tele and Rad part/dwg #GA–2544–12–GR II.	V9 transmitter driver coil	2Z9629–244
T8										(*)	(*)	(*)	(*)	(*)	(*)	COIL, RF: 2 wdg, single layer wnd; unshielded; 3¾ turns #18 (.040″) wire ea wdg; 1 1/16″ wd x 1¾″ lg x 3⅜″ h o/a; ceramic form mtd on phenolic plate,	V9 transmitter driver coil	2Z9629–243

| | | |

2. *Identification Table of Parts for Receiver-Transmitters RT–66/GRC, RT–67/GRC, and RT–68/GRC*—Continued

Ref symbol	RT–66/GRC					RT–67/GRC				RT–68/GRC						Name of part and description	Function of part	Signal Corps stock No.
	1	2	3	4	5	6	7	8	9	10	11	12	13	14	15			
T4						(*)	(*)	(*)	(*)							COIL, RF: tuning; single wdg, single layer wnd; rectangular aluminum shield can; 1.250″ lg x 1″ wd x 2.093″ h excluding mtg studs and term.; ceramic form, powdered iron core; adj iron core tuning; scdr ajd through top of can; two #6–32 NC–2 x ⅜″ lg mtg studs on diagonally opposite corners of base on .608″ x .858″ mtg/c; 6 solder term. on bottom; marked GA–1613–12–5 on side of can; tropicalized; Fed Tele & Rad part/dwg #GA–1613–12–GR V.	V4 harmonic amplifier tuning.	3C1084K–107
T4										(*)	(*)	(*)	(*)	(*)	(*)	COIL, RF: tuning; single wdg, single layer wnd; rectangular aluminum shield can; 1.250″ lg x 1″ wd x 2.093″ h excluding mtg studs and term.; ceramic form, powdered iron core; adj iron core tuning; scdr adj through top of can; two #6–32 NC–2 x ⅜″ lg mtg studs on diagonally opposite corners of base on .608″ x .858″ mtg/c; 6 solder term. on bottom; marked GA–1613–12–6 on side of can; tropicalized; Fed Tele & Rad part/dwg #GA–1613–12–GR VI.	V4 harmonic amplifier tuning.	3C1084K–108
T5	(*)	(*)	(*)	(*)	(*)											COIL, RF: tuning; single wdg, single layer wnd; rectangular aluminum shield can; 1.250″ lg x 1″ wd x 2.093″ h excluding mtg studs and term.; ceramic form, powdered iron core; adj iron core tuning; scdr adj through top of can; two #6–32 NC–2 x ⅜″ lg mtg studs on diagonally opposite corners of base on .608″ x .858″ mtg/c; 6 solder term. on bottom; marked GA–1613–12–7 on side of can; tropicalized; Fed Tele & Rad part/dwg #GA–1613–12–GR VII.	V5 harmonic amplifier tuning.	3C1084K–109
T5						(*)	(*)	(*)	(*)							COIL, RF; tuning; single wdg, single layer wnd; rectangular aluminum shield can; 1.250″ lg x 1″ wd x 2.093″ h excluding mtg studs and term.; ceramic form, powdered iron core; adj iron core tuning; scdr	V5 harmonic amplifier tuning.	3C1084K–110

																		adj through top of can; two #6–32 NC–2 x ⅜'' lg mtg studs on diagonally opposite corners of base on .608'' x .858'' mtg/c; 6 solder term. on bottom; marked GA–1613–12–8 on side of can; tropicalized; Fed Tele & Rad part/dwg #GA–1613–12–GR VIII.		
T5										(*)	(*)	(*)	(*)	(*)	(*)	COIL RF: tuning; single wdg, single layer wnd; rectangular aluminum shield can; 1.250'' lg x 1'' wd x 2.093'' h excluding mtg studs and term.; ceramic form, powdered iron core; adj iron core tuning; scdr adj through top of can; two #6–32 NC–2 x ⅜'' lg mtg studs on diagonally opposite corners of base on .608'' x .858'' mtg/c; 6 solder term. on bottom; marked GA–1613–12–9 on side of can; tropicalized; Fed Tele & Rad part/dwg #GA–1613–12–GR IX.	V5 second harmonic amplifier, plate tuning.	3C1084K–111
L1	(*)	(*)	(*)	(*)	(*)											COIL, RF: tuning; single wdg, single layer wnd; unshielded; 8½ turns #20 tinned copper wire, tapped at 1½ turns; 1 $^{21}/_{32}$'' lg x ⅝'' dia o/a; ceramic form, air core; form .594'' OD x 1⅜'' lg; single D hole mtg; ⅜''–32 NC–2 x .1475'' lg mtg bushing w/locating flat; 3 stud term. on side of form; Fed Tele & Rad part/dwg #GA–1626–12–GR I. (For associated parts see CORE, adj tuning and SPRING loop type.)	V1 first receiver r-f tuning.	3C1084K–112
																(Alternate description)		
L1	(*)															COIL, RF: tuning; single wdg, single layer wnd; unshielded; 9½ turns #20 tinned copper wire tapped at 1½ turns; 1⅝'' lg excluding adj screw x ⅝'' dia; ceramic form, powdered iron core; form ⅝'' OD x 1⅝'' lg; adj iron core tuning, scdr slotted adj screw at end of coil form; single D hole mtg; ½''–13 NC x $^{11}/_{32}$'' lg silver pl thd ceramic mtg bushing w/locating flat molded as p/o form; 3 solder type term. on side of form; tension device on adj screw; Fed Tele & Rad part/dwg #GA–3819–2–GR IX.		

2. *Identification Table of Parts for Receiver-Transmitters RT–66/GRC, RT–67/GRC, and RT–68/GRC*—Continued

Ref symbol	RT–66/GRC					RT–67/GRC				RT–68/GRC						Name of part and description	Function of part	Signal Corps stock No.
	1	2	3	4	5	6	7	8	9	10	11	12	13	14	15			
L1						(*)	(*)	(*)	(*)							COIL, RF: tuning; single wdg, single layer wnd; unshielded; 6½″ turns silver pl copper 1/32″ wd x 1/16″ d plaited into thd of coil form, tapped at ½ turn; 1 2/32″ lg x 5/8″ dia o/a; ceramic form, air core; form .594″ OD x 1⅜″ lg; single D hole mtg; ⅜″–32 NC–2 x .1475″ lg mtg bushing w/locating flat; 3 stud term. on side of form; Fed Tele & Rad part/dwg #GA–1626–12–II. (For associated parts see CORE, adj tuning and SPRING, loop type.)	V1 first receiver r-f tuning.	3C1084K–89
																(Alternate description)		
L1						(*)										COIL, RF: tuning; single wdg, single layer wnd; unshielded; 6 turns #18 tinned copper wire tapped at ¾ turn; 1⅝″ lg excluding adj screw x 5/8″ dia; ceramic form, powdered iron core; form 5/8″ OD x 1⅝″ lg; adj iron core tuning, scdr slotted adj screw at end of coil form; single D hole mtg, ½″–13 NC x 1 1/32″ lg silver pl thd ceramic mtg bushing w/locating flat molded as p/o form; 3 solder type term. on side of form; tension device on adj screw; Fed Tele & Rad part/dwg #GA–3819–2–GR V.		
L1										(*)	(*)	(*)	(*)	(*)	(*)	COIL, RF: tuning; single wdg, single layer wnd; unshielded; 4½ turns #18 tinned copper wire tapped at ½ turn; 1⅝″ lg excluding adj screw x 5/8″ dia; ceramic form, powdered iron core; form 5/8″ OD x 1⅝″ lg; adj iron core tuning; scdr slotted adj screw at end of coil form; single D hole mtg; ½″–13 NC x 1 1/32″ lg silver pl thd ceramic mtg bushing w/locating flat molded as p/o form; 3 solder type term. on side of form; tension device on adj screw; Fed Tele & Rad part/dwg #GA–3819–2–GR I.	V1 first receiver r-f tuning.	3C1084Z32–20

| | | |

2. *Identification Table of Parts for Receiver-Transmitters RT-66/GRC, RT-67/GRC, and RT-68/GRC*—Continued

Ref symbol	RT-66/GRC 1	2	3	4	5	RT-67/GRC 6	7	8	9	RT-68/GRC 10	11	12	13	14	15	Name of part and description	Function of part	Signal Corps stock No.
																COIL, RF—Continued bushing w/locating flat molded as p/o coil form; 2 solder term. on side of form; tension device on adj screw; Fed Tele & Rad part/dwg #GA–3819–2–GR VI.		
L3										(*)	(*)	(*)	(*)	(*)	(*)	COIL, RF: tuning; single wdg, single layer wnd; unshielded; 4½ turns #18 tinned copper wire; 1⅝″ lg excluding adj screw x ⅝″ dia; ceramic form, powdered iron core; form ⅝″ OD x 1⅝″ lg; adj iron core tuning; scdr slotted adj screw at end of coil form; single D hole mtg; ½″–13 NC x 1$\frac{1}{32}$″ lg silver pl thd ceramic mtg bushing w/locating flat molded as p/o coil form; 2 solder type term. on side of form; tension device on adj screw Fed Tele & Rad part/dwg #GA–3819–2–GR II.	V2 receiver mixer grid tuning.	3C1084Z32–21
L12	(*)	(*)	(*)	(*)	(*)											COIL, RF: tuning; single wdg, single layer wnd; unshielded; 7⅝ turns #20 tinned copper wire; 1$\frac{21}{32}$″ lg x ⅝″ dia o/a; ceramic form, air core; form .594″ OD x 1⅜″ lg; single D hole mtg; ⅜″–32 NC–2 x .1475″ lg mtg bushing w/locating flat; 2 stud term. on side of form; Fed Tele & Rad part/dwg #GA–1626–12–GR VII. (For associated parts, see CORE, adj tuning and SPRING, loop type.)	V6 transmitter mixer plate tuning.	3C1084K–94
																(Alternate description)		
L12	(*)															COIL, RF: tuning; single wdg, single layer wnd; unshielded; 8½ turns #20 tinned copper wire; 1⅝″ lg excluding adj screw x ⅝″ dia; ceramic form, powdered iron core; form ⅝″ lg adj iron core tuning; scdr slotted adj screw at end of coil form; single D hole mtg; ½″–13 NC x 1$\frac{1}{32}$″ lg silver pl thd ceramic mtg bushing w/locating flat molded as p/o form; 2 solder type term. on side of form; tension device on adj screw; Fed Tele & Rad part/dwg #GA–3819–2–GR X.		

| | | |

2. Identification Table of Parts for Receiver-Transmitters RT–66/GRC, RT–67/GRC, and RT–68/GRC—Continued

Ref symbol	RT-66/GRC					RT-67/GRC				RT-68/GRC						Name of part and description	Function of part	Signal Corps stock No.
	1	2	3	4	5	6	7	8	9	10	11	12	13	14	15			
																(Alternate description)		
L16	(*)															COIL, RF: tuning; single wdg, single layer wnd; unshielded; 8 turns #20 tinned copper wire; 1⅝'' lg excluding adj screw x ⅝'' dia; ceramic form, powdered iron core; form ⅝'' OD x 1⅝'' lg; adj iron core tuning; scdr slotted adj screw at end of coil form; single D hole mtg; ½''–13 NC x $1\frac{1}{32}$'' lg silver pl thd ceramic mtg bushing w/locating flat molded as p/o form; 2 solder type term. on side of form; tension device on adj screw; Fed Tele & Rad part/dwg #GA–3819–2–GR XII.		
L16						(*)	(*)	(*)	(*)							COIL, RF: tuning; single wdg, single layer wnd; unshielded; 5 turns silver pl copper $\frac{1}{32}$'' wd x $\frac{1}{16}$'' d plaited into thd of coil form; $1\frac{21}{32}$'' lg x ⅝'' dia o/a; ceramic form, air core; form .594'' OD x 1¾'' lg; single D hole mtg; ⅜''–32 NC–2 x .1475'' lg mtg bushing w/locating flat; 2 stud term. on side of form; Fed Tele & Rad part/dwg #GA–1626–12–GR XI. (For associated parts, see CORE, adj tuning and SPRING, loop type.)	V7 transmitter r-f plate tuning.	3C1084K–98
																(Alternate description)		
L16						(*)										COIL, RF: tuning; single wdg, single layer wnd; unshielded; 5¾ turns #18 tinned copper wire; 1⅝'' lg excluding adj screw x ⅝'' dia; ceramic form, powdered iron core; form ⅝'' OD x 1⅝'' lg; adj iron core tuning; scdr slotted adj screw at end of coil form; single D hole mtg; ½''–13 NC x $1\frac{1}{32}$'' lg silver pl thd ceramic mtg bushing w/locating flat molded as p/o form; 2 solder type term. on side of form; tension device on adj screw; Fed Tele & Rad part/dwg #GA–3819–2–GR VIII.		
L16										(*)	(*)	(*)	(*)	(*)	(*)	COIL, RF: tuning; single wdg, single layer wnd; unshielded; 3½ turns #18 tinned	V7 transmitter r-f plate tuning.	3C1084Z32–23

| | | |

2. *Identification Table of Parts for Receiver-Transmitters RT–66/GRC, RT–67/GRC, and RT–68/GRC*—Continued

Ref symbol	RT–66/GRC					RT–67/GRC				RT–68/GRC						Name of part and description	Function of part	Signal Corps stock No.
	1	2	3	4	5	6	7	8	9	10	11	12	13	14	15			
T9						(*)	(*)	(*)	(*)							COIL ASSEMBLY, RF: plate tuning; c/o 1 Fed Tele & Rad #GA–2003–2 frame assy, 1 #GA–1996–2–G2 bkt assy, 0 #GB–2535–2 coupling, 1 #GA–2533–2 worm assy, 1 #GB–2422–2–1 coil, 1 #GA–2001–2 loop assy, miscellaneous hdw; 3″ lg x 2⅝″ wd x 2$\frac{5}{16}$″ h o/a; two .169″ mtg holes on bottom of frame on ⅞″ mtg/c; inductance between movable and fixed coil var by shaft and worm gear assy, between fixed coil and loop coil by shaft w/scdr slot; Fed Tele & Rad part/dwg #GA–2005–14–II.	V11 transmitter power amplifier plate tuning.	3C1084K–105
T9										(*)	(*)	(*)	(*)	(*)	(*)	COIL ASSEMBLY, RF: plate tuning; c/o 1 Fed Tele & Rad #GA–2003–2 frame assy, 1 #GA–1996–2–G3 bkt assy, 1 #GB–2535–2 coupling, 1 #GA–2533–2 worm assy, 1 #GB–2422–2–2 coil, 1 #GA–2001–2 loop assy, miscellaneous hdw; 3″ lg x 2⅝″ wd x 2$\frac{5}{16}$″ h o/a; two .169″ mtg holes on bottom of frame on ⅞″ mtg/c; inductance between movable and fixed coil var by shaft and worm gear assy, between fixed coil and loop coil by shaft w/scdr slot; Fed Tele & Rad part/dwg #GA–2005–14–III.	V11 transmitter power amplifier tuning.	3C1084K–106
																(Alternate description)		
T9						(*)										COIL ASSEMBLY, RF: plate tuning c/o Fed Tele & Rad #GA–4194–2 frame assy, 1 #GA–1996–2 bkt assy, 1 #GB–2535–2 coupling, 1 #GA–2533 worm assy, 1 #GB–417–2 coil, miscellaneous hdw; 3″ lg x 2⅝″ wd x 2$\frac{5}{16}$″ h o/a; three .169 mtg holes on bottom; coupling between movable and fixed coils var by shaft and worm gear assy, inductance var by shaft w/scdr slit; Fed Tele & Rad part/dwg #GA–4156–14–GR II.	V11 transmitter power amplifier plate tuning.	
O303	(*)	(*)	(*)	(*)	(*)	(*)	(*)	(*)	(*)	(*)	(*)	(*)	(*)	(*)	(*)	COLLAR, shaft: p/o Fed Tele & Rad #GA–1593–14 panel assy; brass bright dip finish; round w/offset on 1 side face;	Mounting and stop collar for flexible shaft.	2Z2935–94

																	¼″ OD x .251″ ID x ¼″ thk o/a; mts on ¼″ shaft, fastens by 2 set screws; has offset on 1 face to provide rotational stop action; Fed Tele & Rad part/dwg #GB–2452–2.	
P2	(*)	(*)	(*)	(*)	(*)	(*)	(*)	(*)	(*)	(*)	(*)	(*)	(*)	(*)	(*)		CONNECTOR, plug: single round male cont; straight, 2¼₄″ dia x 6½″ lg o/a incl cable; cylindrical silver pl brass body 3¾₄″ lg; teflon insert; push-on friction mtg; mts w/mating receptacle; supplied w/lg of Radio Frequency Cable RG–58/U attached to connector; Amphenol dwg #82–830; Fed Tele & Rad part/dwg #GH–2116–2–4.	Transmitter oscillator coupling.	2Z3021–221
P1	(*)	(*)	(*)	(*)	(*)	(*)	(*)	(*)	(*)	(*)	(*)	(*)	(*)	(*)	(*)		CONNECTOR, plug: single round male cont; straight; 2¼₄″ dia x 7½″ lg o/a incl cable; cylindrical silver pl brass body 3¾₄″ lg; teflon insert; push-on friction mtg, mts w/mating receptacle; supplied w/lg of Radio Frequency Cable RG–58/U attached to connector; Amphenol dwg #82–830; Fed Tele & Rad part/dwg #GH–2116–2–5.	Receiver mixer coupling	2Z3021–220
P6	(*)	(*)	(*)	(*)	(*)	(*)	(*)	(*)	(*)	(*)	(*)	(*)	(*)	(*)	(*)		CONNECTOR, plug: single round male cont; straight; 2¼₄″ dia x 9¼″ lg o/a incl cable; cylindrical silver pl brass body 3¾₄″ lg; teflon insert; push-on friction mtg; mts w/mating receptacle; supplied w/lg of Radio Frequency Cable RG–58/U attached to connector; Amphenol dwg #82–830; Fed Tele & Rad part/dwg #GH–2116–2–6.	Transmitter antenna coupling.	2Z3021–219
P304,	(*)	(*)	(*)	(*)	(*)	(*)	(*)	(*)	(*)	(*)	(*)	(*)	(*)	(*)	(*)		CONNECTOR, plug: 15 round female cont; straight; 1½″ lg x ¾″ wd x .415″ h excluding term.; rectangular phenolic body; two .15″ dia mtg holes on 1.188″ mtg/c; cont marked from 1–15; Amphenol dwg #26–150; Fed Tele & Rad part/dwg #GH–2126–12.	P304: I-f chassis interconnecting plug.	2Z3076–31
P305,	(*)	(*)	(*)	(*)	(*)	(*)	(*)	(*)	(*)	(*)	(*)	(*)	(*)	(*)	(*)			P305: I-f chassis interconnecting plug.	
P306,	(*)	(*)	(*)	(*)	(*)	(*)	(*)	(*)	(*)	(*)	(*)	(*)	(*)	(*)	(*)			P306: I-f chassis interconnecting plug.	
P307,	(*)	(*)	(*)	(*)	(*)	(*)	(*)	(*)	(*)	(*)	(*)	(*)	(*)	(*)	(*)			P307: R-f chassis interconnecting plug.	
P308	(*)	(*)	(*)	(*)	(*)	(*)	(*)	(*)	(*)	(*)	(*)	(*)	(*)	(*)	(*)			P308: R-f chassis interconnecting plug.	

2. Identification Table of Parts for Receiver-Transmitters RT–66/GRC, RT–67/GRC, and RT–68/GRC—Continued

Ref symbol	RT-66/GRC					RT-67/GRC				RT-68/GRC						Name of part and description	Function of part	Signal Corps stock No.
	1	2	3	4	5	6	7	8	9	10	11	12	13	14	15			
J307	(*)	(*)	(*)	(*)	(*)	(*)	(*)	(*)	(*)	(*)	(*)	(*)	(*)	(*)	(*)	CONNECTOR, receptacle: single round female cont; straight; 1 9/32" lg x 5/16" dia o/a; cylindrical silver pl brass body; polyethylene insert; mts through hole in panel, body has 3/8"–32 NEF–2 thd 1 1/32" lg; O ring wp seal in panel bushing; supplied w/lockwasher and nut; Amphenol dwg #31–102; Fed Tele & Rad part/dwg #GH–2118–2.	Antenna connector	2Z3062–233
J101, J102, J306	(*)	(*)	(*)	(*)	(*)	(*)	(*)	(*)	(*)	(*)	(*)	(*)	(*)	(*)	(*)	CONNECTOR, receptacle: single round female cont; straight; 15/16" lg x 1/2" dia o/a; cylindrical silver pl brass body; teflon insert; single hole mtg 3/8"–32 NF–2 bushing 3/16" lg; supplied w/lockwasher and nut; Amphenol dwg #82–831; Fed Tele & Rad part/dwg #GH–2117–2.	J101: First mixer lead connector. J102: Transmitter oscillator lead connector. J306: Antenna lead connector.	2Z3062–232
J312	(*)	(*)	(*)	(*)	(*)	(*)	(*)	(*)	(*)	(*)	(*)	(*)	(*)	(*)	(*)	CONNECTOR, receptacle: 9 round female cont; straight; 1 15/32" dia x 1 1/8" max lg o/a; cont rated 10 amp at 800 v ac; cylindrical brass body, electro tin pl finish locking; molded phenolic insert; single hole mtg 1 1/4"–18 NEF–2 x 3/8" lg mtg bushing; O ring wp seal in mtg fl, supplied w/spanner type mtg nut; immersion and salt spray resistant; 2 index flats on mtg bushing; 1/4"–20 double thd tapped metal insert in ctr of phenolic insert provides locking action w/mating plug; locating key in shell and groove in insert; Amphenol dwg #164–3; Fed Tele & Rad part/dwg #GH–2082–12.	Control cable connector	2Z3070–49
J310, J311	(*)	(*)	(*)	(*)	(*)	(*)	(*)	(*)	(*)	(*)	(*)	(*)	(*)	(*)	(*)	CONNECTOR, receptacle: 10 round button type cont; straight; 1.286" max dia x 1.197" max d o/a; cylindrical SS body, sand blast finish, locking; molded phenolic insert; single hole mtg, 1"–32 NS–2 x 5/16" lg thd mtg bushing; O ring wp seal on mtg fl, supplied w/spanner type mtg nut; immersion and salt spray resistant; index flats on mtg portion; Amphenol	Audio connectors	2Z3030-27

																	dwg #164–7 or Cannonelec dwg #17651–1; Fed Tele & Rad part/dwg #GH–2079–12.		
J309	(*)	(*)	(*)	(*)	(*)	(*)	(*)	(*)	(*)	(*)	(*)	(*)	(*)	(*)	(*)		CONNECTOR, receptacle: 14 round female cont; straight; 1 $^{27}/_{32}$″ dia x 1⅛″ lg o/a; cont rated 10 amp at 800 v ac; cylindrical brass body, electrotin pl finish, locking; molded phenolic insert; single hole mtg, 1⅛″–18 NEF–2 x ⅜″ lg mtg bushing; O ring wp seal in mtg fl, supplied w/spanner type mtg nut and lockwasher; immersion and salt spray resistant; 2 index flats on mtg bushing; ¼″–20 double thd tapped metal insert in ctr of phenolic insert provides locking action w/mating plug; locating key in outer shell and groove in insert; Amphenol dwg #164–5; Fed Tele & Rad part/dwg #GH–2083–12.	Power connector	2Z3075–26
J4, J5, J106, J107, J108	(*)	(*)	(*)	(*)	(*)	(*)	(*)	(*)	(*)	(*)	(*)	(*)	(*)	(*)	(*)		CONNECTOR, receptacle: 15 round male cont; straight; 1½″ lg x ¾″ wd x $^{13}/_{64}$″ h excluding term. and cont; rectangular phenolic body; two .150″ dia mtg holes on 1.888″ mtg/c cont marked from 1–15; Amphenol dwg #26–151; Fed Tele & Rad part/dwg #GH–2127–12.	Front panel interconnecting receptacles.	2Z3035–31
O15, O16, O17, O18	(*)	(*)	(*)	(*)	(*)	(*)	(*)	(*)	(*)								CORE, adjustable tuning: c/o 1 Fed Tele & Rad #GH–1542–2–1 tuning core, 1 #GB–1622–2 nut, and 1 #GB–2709–2 nut; cylindrical core w/thd stud mtd through hex. nut; 1 $^{1}/_{16}$″ lg x ½″ across flats of hex. portion; mts by means of ⅜″–32 NC–2 x $^{5}/_{16}$″ d tapped hole in hex. mtg nut; scdr adj slot in end of thd stud; Fed Tele & Rad part/dwg #GA–1749–2. (For columns 1 and 6, sets containing the coils described in the alternate descriptions for L1, L3, L12, and L16 do not use the core described above.)	O15: Adjustable tuning core, part of L1. O16: Adjustable tuning core, part of L3. O17: Adjustable tuning core, part of L12. O18: Adjustable tuning core, part of L16.	2Z3262–47
O401	(*)	(*)	(*)	(*)	(*)	(*)	(*)	(*)	(*)	(*)	(*)	(*)	(*)	(*)	(*)		COUPLING, flexible: c/o 1 Fed Tele & Rad #GB–1630–12 spider, 1 #GB–1631–2–1 cap, 1 #GB–1632–2 bellows, 1 #GB–2741–2 sleeve, 1 #GA–2743–12 gear assy, and 2 set screws; 1.154″ max dia x 1¼″ lg o/a; .189″ dia mtg hole in cap end, 36 axial teeth and three .140″ mtg holes on .437″ rad, 120° apart in gear end; rotating	Dial drive to capacitor coupling.	2Z3295–128

2. *Identification Table of Parts for Receiver-Transmitters RT–66/GRC, RT–67/GRC, and RT–68/GRC*—Continued

Ref symbol	RT-66/GRC					RT-67/GRC				RT-68/GRC						Name of part and description	Function of part	Signal Corps stock No.
	1	2	3	4	5	6	7	8	9	10	11	12	13	14	15			
																COUPLING, flexible—Continued spider locking arrangement to provide locking w/matching gear on dial drive assy; Fed Tele & Rad part/dwg #GA–1640–14–1.		
O402	(*)	(*)	(*)	(*)	(*)	(*)	(*)	(*)	(*)	(*)	(*)	(*)	(*)	(*)	(*)	COUPLING, flexible: c/o 1 Fed Tele & Rad #GB–1630–12 spider, 1 #GB–1631–2–2 cap, 1 #GB–1632–2 bellows, 1 #GB–2741–2 sleeve, 1 #GA–2743–12 gear assy, and 2 set screws; 1.154″ max dia x 1¼″ lg o/a; .257″ dia mtg hole in cap end, 36 axial teeth and three .140″ mtg holes on .437″ rad, 120° apart in gear end; rotating spider locking arrangement to provide locking w/matching gear on dial drive assy; Fed Tele & Rad part/dwg #GA–1640–12–2.	Dial drive to capacitor coupling.	2Z3295–129
O403	(*)	(*)	(*)	(*)	(*)	(*)	(*)	(*)	(*)	(*)	(*)	(*)	(*)	(*)	(*)	COUPLING, flexible: c/o 1 Fed Tele & Rad #GB–1630–12 spider, 1 #GB–2673–2 cap, 1 #GB–1632–2 bellows, 1 #GB–2712–2 sleeve, 1 #GA–2743–12 gear assy, and 2 cap screws; 1.154″ max dia 1¼″ lg o/a; .377″ dia mtg hole in cap end, 36 axial teeth and three .140″ mtg holes on .437″ rad, 120° apart in gear end; rotating spider locking arrangement to provide locking w/matching gear on dial drive assy; Fed Tele & Rad part/dwg #GA–1640–12–3.	Dial drive to capacitor coupling.	2Z3295–131
O102	(*)	(*)	(*)	(*)	(*)	(*)	(*)	(*)	(*)	(*)	(*)	(*)	(*)	(*)	(*)	COUPLING, flexible: c/o 1 ea Fed Tele & Rad #GB–1631–2–2 and #GB–1631–2–3 caps, 1 #GB–1632–2 bellows, and 4 set screws; ⅝″ dia x 1 1/16″ lg o/a; 1 end cap has .257″ dia mtg hole, other end cap .377″ dia mtg hole; ea end cap has 2 set screws; Fed Tele & Rad part/dwg #GA–2377–12.	I-f variable capacitor to shaft coupling.	2Z3295–130
A301	(*)	(*)	(*)	(*)	(*)	(*)	(*)	(*)	(*)	(*)	(*)	(*)	(*)	(*)	(*)	COVER: c/o 1 Fed Tele & Rad #GT–3088–12 cover, 2 #GA–3068–2 knobs, 1 #GT–3080–2 lamp cover, 1 #GR–3028–2 and 2 #GR–3029–2 O rings, 2 #GP–3092–2 lens	Dial drive and detent adjustable access hole cover.	2Z3351–205

																	1 ea #GB–3032–2 and #GB–3033–2 lens retainer, 2 #GA–3067–12 studs, 2 ea #GB–3070–2 and #GB–3071–2 washers, 2 #GB–3069–2 stops, and 2 #GB–3072–2 springs; kidney shaped; approx 8 2/32" lg x 4 13/32" wd x 1 9/32" thk o/a; fourteen .128" dia mtg holes around outer edge, on irregular spacing; marked MCS and TENTH MCS; Fed Tele & Rad part/dwg #GA–3087–12.		
A 302	(*)	(*)	(*)	(*)	(*)	(*)	(*)	(*)	(*)	(*)	(*)	(*)	(*)	(*)	(*)	COVER: c/o 1 Fed Tele & Rad #GC–3030–2 lamp cover and 1 #GT–3081–2 decal· aluminum casting, olive drab finish; rectangular shape; 2 15/32" lg x 3/4" wd x .212" thk; two .169" dia mtg holes on 2" mtg/c; marked LAMP; oval shoulder and groove on back side for O ring gasket; Fed Tele & Rad part/dwg #GT–3080–2.	Pilot lamp access hole cover.	2Z3351–206
Y4										(*)	(*)	(*)	(*)	(*)	(*)	CRYSTAL UNIT, quartz: Crystal Unit CR–18/U; single xtal plate in Crystal Holder HC–6/U; nom freq 6091.666 kc; Sig C spec #71–3314.	Oscillator element	2X209–6091.666
Y4	(*)	(*)	(*)	(*)	(*)											CRYSTAL UNIT, quartz: crystal Unit CR–18/U; single xtal plate in Crystal Holder HC–6/U; nom freq 6183.333 kc.	Oscillator element	2X209–6183.333
Y5										(*)	(*)	(*)	(*)	(*)	(*)	CRYSTAL UNIT, quartz: Crystal Unit CR–18/U; single xtal plate in Crystal Holder HC–6/U; nom freq 6258.333 kc.	Oscillator element	2X209–6258.333
Y6										(*)	(*)	(*)	(*)	(*)	(*)	CRYSTAL UNIT, quartz: Crystal Unit CR–18/U; single xtal plate in Crystal Holder HC–6/U; nom freq 6425.000 kc.	Oscillator element	2X209–6425
Y5	(*)	(*)	(*)	(*)	(*)											CRYSTAL UNIT, quartz: Crystal Unit CR–18/U; single xtal plate in Crystal Holder HC–6/U; nom freq 6516.666 kc.	Oscillator element	2X209–6516.666
Y7										(*)	(*)	(*)	(*)	(*)	(*)	CRYSTAL UNIT, quartz: Crystal Unit CR–18/U; single xtal plate in Crystal Holder HC–6/U; nom freq 6591.666 kc.	Oscillator element	2X209–6591.666
Y8										(*)	(*)	(*)	(*)	(*)	(*)	CRYSTAL UNIT, quartz: Crystal Unit CR–18/U; single xtal plate in Crystal Holder HC–6/U; nom freq 6758.333 kc.	Oscillator element	2X209–6758.333
Y6	(*)	(*)	(*)	(*)	(*)											CRYSTAL UNIT, quartz: Crystal Unit CR–18/U; single xtal plate in Crystal Holder HC–6/U; nom freq 6850.000 kc.	Oscillator element	2X209–6850
Y6						(*)	(*)	(*)	(*)							CRYSTAL UNIT, quartz: Crystal Unit CR–18/U; single xtal plate in Crystal Holder HC–6/U; nom freq 6887.500 kc.	Oscillator element	2X209–6887.5

2. Identification Table of Parts for Receiver-Transmitters RT–66/GRC, RT–67/GRC, and RT–68/GRC—Continued

Ref symbol	RT-66/GRC					RT-67/GRC				RT-68/GRC						Name of part and description	Function of part	Signal Corps stock No.
	1	2	3	4	5	6	7	8	9	10	11	12	13	14	15			
Y9										(*)	(*)	(*)	(*)	(*)	(*)	CRYSTAL UNIT, quartz: Crystal Unit CR–18/U; single xtal plate in Crystal Holder HC–6/U; nom freq 6925.000 kc.	Oscillator element	2X209–6925
Y10										(*)	(*)	(*)	(*)	(*)	(*)	CRYSTAL UNIT, quartz: Crystal Unit CR–18/U; single xtal plate in Crystal Holder HC–6/U; nom freq 7091.666 kc.	Oscillator element	2X209–7091.666
Y7						(*)	(*)	(*)	(*)							CRYSTAL UNIT, quartz: Crystal Unit CR–18/U; single xtal plate in Crystal Holder HC–6/U; nom freq 7137.500 kc.	Oscillator element	2X209–7137.5
Y7	(*)	(*)	(*)	(*)	(*)											CRYSTAL UNIT, quartz: Crystal Unit CR–18/U; single xtal plate in Crystal Holder HC–6/U; nom freq 7183.333 kc.	Oscillator element	2X209–7183.333
Y11										(*)	(*)	(*)	(*)	(*)	(*)	CRYSTAL UNIT, quartz: Crystal Unit CR–18/U; single xtal plate in Crystal Holder HC–6/U; nom freq 7258.333 kc.	Oscillator element	2X209–7258.333
Y8						(*)	(*)	(*)	(*)							CRYSTAL UNIT, quartz: Crystal Unit CR–18/U; single xtal plate in Crystal Holder HC–6/U; nom freq 7387.500 kc.	Oscillator element	2X209–7387.5
Y12										(*)	(*)	(*)	(*)	(*)	(*)	CRYSTAL UNIT, quartz: Crystal Unit CR–18/U; single xtal plate in Crystal Holder HC–6/U; nom freq 7425.000 kc.	Oscillator element	2X209–7425
Y8, Y1	(*)	(*)	(*)	(*)	(*)	(*)	(*)	(*)	(*)							CRYSTAL UNIT, quartz: Crystal Unit CR–18/U; single xtal plate in Crystal Holder HC–6/U; nom freq 7516.666 kc.	Oscillator elements	2X209–7516.666
Y13										(*)	(*)	(*)	(*)	(*)	(*)	CRYSTAL UNIT, quartz: Crystal Unit CR–18/U; single xtal plate in Crystal Holder HC–6/U; nom freq 7591.666 kc.	Oscillator element	2X209–7591.666
Y9						(*)	(*)	(*)	(*)							CRYSTAL UNIT, quartz: Crystal Unit CR–18/U; single xtal plate in Crystal Holder HC–6/U; nom freq 7637.500 kc.	Oscillator element	2X209–7637.5
Y14										(*)	(*)	(*)	(*)	(*)	(*)	CRYSTAL UNIT, quartz: Crystal Unit CR–18/U; single xtal plate in Crystal Holder HC–6/U; nom freq 7758.333 kc.	Oscillator element	2X209–7758.333
Y1	(*)	(*)	(*)	(*)	(*)											CRYSTAL UNIT, quartz: Crystal Unit CR–18/U; single xtal plate in Crystal Holder HC–6/U; nom freq 7775.000 kc.	Oscillator element	2X209–7775
Y2						(*)	(*)	(*)	(*)							CRYSTAL UNIT, quartz: Crystal Unit CR–18/U; single xtal plate in Crystal Holder HC–6/U; nom freq 7850.000 kc.	Oscillator element	2X209–7850

| | | |

2. *Identification Table of Parts for Receiver-Transmitters RT–66/GRC, RT–67/GRC, and RT–68/GRC*—Continued

Ref symbol	RT–66/GRC					RT–67/GRC				RT–68/GRC						Name of part and description	Function of part	Signal Corps stock No.
	1	2	3	4	5	6	7	8	9	10	11	12	13	14	15			
CR301	(*)	(*)	(*)	(*)	(*)	(*)	(*)	(*)	(*)	(*)	(*)	(*)	(*)	(*)	(*)	CRYSTAL UNIT, rectifying: plastic case; .83 ma max inverse cur. at −50 v; 5 ma min forward cur. at +1 v; shunt capacitance 1 $\mu\mu$f; .5″ lg x .24″ dia; 2 axial wire leads; marked 1N–43; RMA type #1N–43: WECo #1N–43.	R-f metering diode, alternate.	2J1N43
H301 through H308	(*)	(*)	(*)	(*)	(*)	(*)	(*)	(*)	(*)	(*)	(*)	(*)	(*)	(*)	(*)	FASTENER, Dzus: die cast zinc and steel, olive drab finish: 1⅜″ lg x 1$^{5}/_{16}$″ wd x $^{5}/_{16}$″ thk o/a; mts by shaft through ¼″ dia clearance hole; preloaded spring pressure unlocked approx 32 lb, locked 45 lb; Dzus dwg #X–486; Fed Tele & Rad part/dwg #GA–2178–2.	Panel-to-case fasteners	6Z3809–27
O310	(*)	(*)	(*)	(*)	(*)	(*)	(*)	(*)	(*)	(*)	(*)	(*)	(*)	(*)	(*)	GASKET: Buna N or neoprene; single hole; rectangular; 10.532″ lg x 8.345″ wd x .187″ thk; hole 10.052″ lg x 7.865″ wd; 35–40 durometer hardness; p/o Fed Tele & Rad #GA–1593–14 panel assy; Fed Tele & Rad part/dwg #GR–1443–12–4.	Panel-to-case waterproof gasket.	2Z4868.763
O312	(*)	(*)	(*)	(*)	(*)	(*)	(*)	(*)	(*)	(*)	(*)	(*)	(*)	(*)	(*)	GASKET: JW60 crude rubber; single hole; circular w/circular cross section; 6½″ OD x 6¼″ ID x ⅛″ thk; p/o Fed Tele & Rad #GA–1593–14 panel assy; Linear Inc #1866–37; Fed Tele & Rad part/dwg #GA–1946–1–1.	Dial drive cover waterproof gasket.	2Z4868.766
O313	(*)	(*)	(*)	(*)	(*)	(*)	(*)	(*)	(*)	(*)	(*)	(*)	(*)	(*)	(*)	GASKET: Buna N; single hole; circular w/circular cross section; $^{3}/_{32}$″ OD x $^{5}/_{32}$″ ID x $^{1}/_{16}$″ thk; p/o Fed Tele & Rad #GA–1593–14 panel assy; Linear Inc #1820–2; Fed Tele & Rad part/dwg #GS–1948–1–15.	Binding post waterproof mounting gasket.	6L34005
E301	(*)	(*)	(*)	(*)	(*)	(*)	(*)	(*)	(*)	(*)	(*)	(*)	(*)	(*)	(*)	INSULATOR, standoff: round post shape; natural or black grade LTS–E–4 phenolic w/electrotin pl brass term. lug, cad pl and clear iridited hex. brass mtg base and stud; $^{13}/_{16}$″ lg o/a; 600 v rms breakdown; $^{5}/_{16}$″ dia o/a; single #6–32 NC–2 x ¼″ lg mtg stud; p/o Fed Tele & Rad #GA–1593–14 panel assy; Cambridge Therm #X–1518–B; Fed Tele & Rad part/dwg #GN–2198–2.	Wiring terminal post	3G350–106

E43 through E65, E120 through E156	(*)	(*)	(*)	(*)	(*)	(*)	(*)	(*)	(*)	(*)	(*)	(*)	(*)	(*)	(*)	INSULATOR, standoff: round post shape; white unglazed ceramic w/metal end caps; .6" lg; .209" dia; ceramic, silicon treated; rivet type mtg stud on 1 end cap .094" dia x .1" lg, solder type stud term. other cap; Fed Tele & Rad part/dwg #GG–1743–2–2.	Standoff, wiring terminal posts.	3G350–110
E24	(*)	(*)	(*)	(*)	(*)	(*)	(*)	(*)	(*)	(*)	(*)	(*)	(*)	(*)	(*)	INSULATOR, standoff: round post shape; grade L–2 white ceramic, glazed; ½" lg; ⅜" dia; both ends tapped #8–32 NC–2 thd 3/16" d; treated w/GE dri-film #9977 or Dow-Corning #DC–200; p/o #GA–1672–14 RF chassis assy; Fed Tele & Rad part/dwg #GG–2101–2.	Terminal mounting insulator.	3G350–109
E304, E305	(*)	(*)	(*)	(*)	(*)	(*)	(*)	(*)	(*)	(*)	(*)	(*)	(*)	(*)	(*)	KNOB: round w/bar; olive drab, zinc alloy; for ¼" dia double flatted shaft; single #6–32 screw through hole in face of knob screws into axially tapped hole in end of shaft; 1 white luminous line on bar portion; 1 3/16" lg x ⅞" wd x 15/32" h o/a; shaft hole .359" d from bottom surface; luminous markings; Fed Tele & Rad part/dwg #GC–1246–2.	E304: VOLUME control knob. E305: DIAL LIGHT-OFF-ON-RING switch knob.	2Z5822–402
E306	(*)	(*)	(*)	(*)	(*)	(*)	(*)	(*)	(*)	(*)	(*)	(*)	(*)	(*)	(*)	KNOB: round w/bar; olive drab, zinc alloy; for ¼" dia double flatted shaft; single #6–32 screw thru hole in face of knob screws into axially tapped hole in end of shaft; 1 white luminous line on bar portion; 1 7/16" lg x ⅞" wd x 15/32" h o/a; shaft hole .359" d from bottom surface; luminous markings; Fed Tele & Rad part/dwg #GC–1690–2.	METER switch knob	2Z5822–401
E309	(*)	(*)	(*)	(*)	(*)	(*)	(*)	(*)	(*)	(*)	(*)	(*)	(*)	(*)	(*)	KNOB: round; olive drab zinc alloy; for ¼" dia double flatted shaft; single #6–32 screw thru hole in face of knob screws into axially tapped hole in end of shaft; 1 white luminous line; 23/32" max dia at bottom tapers to 21/32" max dia at top; 15/32" h o/a; shaft hole .359" from bottom surface; luminous markings; Fed Tele & Rad part/dwg #GC–1245–2.	SQUELCH-OFF control knob.	2Z5822–403

2. Identification Table of Parts for Receiver-Transmitters RT–66/GRC, RT–67/GRC, and RT–68/GRC—Continued

Ref symbol	RT–66/GRC					RT–67/GRC				RT–68/GRC						Name of part and description	Function of part	Signal Corps stock No.
	1	2	3	4	5	6	7	8	9	10	11	12	13	14	15			
N1	(*)	(*)	(*)	(*)	(*)											LABEL: circuit label; white nylon taffeta, 120 x 88 mesh; 7¾'' wd x 26¾'' lg x .004'' thk, w/¼'' wd nylon tape stitched to 1 end extending 16¼'' beyond label; black printing on white background; edges heat treated to prevent fraying; individually packed; Fed Tele & Rad part/dwg #GD–1795–26; Sig C dwg #SC–D–40607–A.	Circuit label, Receiver-Transmitter RT–66/GRC.	6D16838
N1						(*)	(*)	(*)	(*)							LABEL: circuit label; white nylon taffeta, 120 x 88 mesh; 7¾'' wd x 26¾'' lg x .004'' thk, w/¼'' wd nylon tape stitched to 1 end extending 16¼'' beyond label; black printing on white background; edges heat treated to prevent fraying; individually packed; Fed Tele & Rad part/dwg #GD–2948–26; Sig C dwg #SC–D–40608–A.	Circuit label, Receiver-Transmitter RT–67/GRC.	6D16838–1
N1										(*)	(*)	(*)	(*)	(*)	(*)	LABEL: circuit label; white nylon taffeta, 120 x 88 mesh; 7¾'' wd x 26¾'' lg x .004'' thk, w/¼'' wd nylon tape stitched to 1 end extending 16¼'' beyond label; black printing on white background; edges heat treated to prevent fraying; individually packed; Fed Tele & Rad part/dwg #GD–2949–26; Sig C dwg #SC–D–40609–A.	Circuit label, Receiver-Transmitter RT–68/GRC.	6D16838–2
O314, O315	(*)	(*)	(*)	(*)	(*)	(*)	(*)	(*)	(*)	(*)	(*)	(*)	(*)	(*)	(*)	GASKET: Buna N; single hole; circular w/circular cross sections; ⅜'' OD x ¼'' ID x 1/16'' thk; p/o Fed Tele & Rad #GA–1593–14 panel assy; Linear Inc #1820–5; Fed Tele & Rad part/dwg #GS–1948–1–4.	Shaft assembly waterproof mounting gaskets.	2Z4868.767
O316	(*)	(*)	(*)	(*)	(*)	(*)	(*)	(*)	(*)	(*)	(*)	(*)	(*)	(*)	(*)	GASKET: Buna N; single hole; circular w/circular cross section; 7/16'' OD x 5/16'' ID x 1/16'' thk; p/o Fed Tele & Rad #GA–1593–14 panel assy; Linear Inc #1820–6; Fed Tele & Rad part/dwg #GS–1948–1–5.	Binding post waterproof mounting gasket.	2Z4868.768
O319	(*)	(*)	(*)	(*)	(*)	(*)	(*)	(*)	(*)	(*)	(*)	(*)	(*)	(*)	(*)	GASKET: Buna N; single hole; circular w/circular cross section; 1 1/16'' OD x ½'' ID x 3/32'' thk; p/o Fed Tele & Rad #GA–1593–14 panel assy; Linear Inc	Adjustable plunger cap waterproof gasket.	2Z4868.764

																#1820–10; Fed Tele & Rad part/dwg #GS–1948–1–16.		
O320	(*)	(*)	(*)	(*)	(*)	(*)	(*)	(*)	(*)	(*)	(*)	(*)	(*)	(*)	(*)	GASKET: Buna; single hole; circular w/circular cross section; 1.233″ OD x 1.093″ ID x .07″ thk; p/o Fed Tele & Rad #GA–1345–12 cover assy; Fed Tele & Rad part/dwg #GR–3028–2.	Pilot lamp cover waterproof gasket.	2Z4868.765
O311	(*)	(*)	(*)	(*)	(*)	(*)	(*)	(*)	(*)	(*)	(*)	(*)	(*)	(*)	(*)	GASKET: Buna N; 1 hole; circular w/circular cross section; 1½″ OD x 1¼″ ID x ⅛″ thk; Linear Inc #1820–23; Fed Tele & Rad part/dwg #GS–1948–1–14.	Meter mounting waterproof gasket.	2Z4868.737
O13	(*)	(*)	(*)	(*)	(*)	(*)	(*)	(*)	(*)	(*)	(*)	(*)	(*)	(*)	(*)	GEAR: spur type; brass, acid dip finish; straight teeth; 48 teeth; 48 pitch, 1″ pitch dia; 1.04″ OD x .251″ ID x ⅜″ thk o/a; straight face; hub ½″ OD x ¼″ dia shaft; p/o Fed Tele & Rad #GA–1515–12 parts 1, 2, and 3 switch assy; Boston Gear cat. #G142; Fed Tele & Rad part/dwg #GB–1481–2.	Crystal switch-driven gear.	2C4410E/G9
O14						(*)	(*)	(*)	(*)							GEAR: spur type; brass, acid dip finish; straight teeth; 48 teeth; 48 pitch, .958″ pitch dia; .998″ OD x .251″ ID x ⅜″ thk; straight face; hub 7/16″ dia x ¼″ lg; mts on ¼″ dia shaft, two #6–32 NC–2 tapped holes in hub 90° apart; p/o Fed Tele & Rad #GA–1515–12–2 switch assy; Fed Tele & Rad part/dwg #GB–1495–2.	Crystal switch-driven gear.	2Z4878–1161
O14										(*)	(*)	(*)	(*)	(*)	(*)	GEAR: spur type; brass, acid dip finish; straight teeth; 48 teeth; 48 pitch, .646″ pitch dia; .686″ OD x .251″ ID x ⅜″ thk; straight face; hub 7/16″ dia x ¼″ lg; mts on ¼″ dia shaft, two #6–32 NC–2 tapped holes in hub 90° apart; p/o Fed Tele & Rad #GA–1515–12–3 switch assy; Fed Tele & Rad part/dwg #GB–1496–2.	Crystal switch-driven gear.	2Z4878–1163
O14	(*)	(*)	(*)	(*)	(*)											GEAR: spur type; brass, acid dip finish; straight teeth; 48 teeth; 48 pitch, .667″ pitch dia; .707″ OD x .251″ ID x ⅜″ thk; straight face; hub 7/16″ dia x ¼″ lg; mts on ¼″ dia shaft, two #6–32 NC–2 tapped holes in hub 90° apart; p/o Fed Tele & Rad #GA–1515–12–1 switch assy; Fed Tele & Rad part/dwg #GB–1497–2.	Crystal switch-driven gear.	2Z4878–1162

2. Identification Table of Parts for Receiver-Transmitters RT–66/GRC, RT–67/GRC, and RT–68/GRC—Continued

Ref symbol	RT–66/GRC					RT–67/GRC				RT–68/GRC						Name of part and description	Function of part	Signal Corps stock No.
	1	2	3	4	5	6	7	8	9	10	11	12	13	14	15			
O4	(*)	(*)	(*)	(*)	(*)	(*)	(*)	(*)	(*)	(*)	(*)	(*)	(*)	(*)	(*)	GEAR ASSEMBLY: p/o Fed Tele & Rad #GA–1897–12 capacitor assy; c/o 1 Fed Tele & Rad #GB–1885–2 gear, 1 #GB–1886–2 anchor, 1 #GB–1894–2 arm, and 2 set screws; approx ¾'' lg x 7/16'' wd x 9/16'' d o/a; mtg hole through ctr of gear .156'' dia; mts on shaft by 2 set screws, gear has 18 teeth, 48 pitch; Fed Tele & Rad part/dwg #GA–1890–2.	Capacitor assembly drive gear assembly.	2Z4875–366
O5	(*)	(*)	(*)	(*)	(*)	(*)	(*)	(*)	(*)	(*)	(*)	(*)	(*)	(*)	(*)	GEAR ASSEMBLY: p/o Fed Tele & Rad #GA–1897–12 capacitor assy; c/o 1 #GC–1895–2 gear segment, 1 #GB–1893–2 pin, and hdw; approx 1⅞'' lg x 1 3/32'' wd 27/32'' d o/a; .189'' dia mtg hole; mts on shaft; gear segment has 10 teeth; Fed Tele & Rad part/dwg #GA–1882–2.	Capacitor assembly drive gear segment assembly.	2Z4875–365
E11 through E23	(*)	(*)	(*)	(*)	(*)	(*)	(*)	(*)	(*)	(*)	(*)	(*)	(*)	(*)	(*)	INSULATOR, bead: fish spine bead shape; white ceramic, unglazed; ⅛'' max lg; ⅛'' max OD x .056'' ID; rounded on front end; cupped .036'' max d on rear end; AlSiMag catalog #W–2602, or Stupakoff catalog #78.0018; Fed Tele & Rad part/dwg #GG–2524–2.	Relay lead insulators	3G80–1
E25 through E42, E203, E303	(*)	(*)	(*)	(*)	(*)	(*)	(*)	(*)	(*)	(*)	(*)	(*)	(*)	(*)	(*)	INSULATOR, feedthrough: cylindrical shape; white grade L–4 steatite, unglazed; 1 9/32'' lg o/a; .187'' o/a dia; mts in .168'' dia hole; c/o 1 Fed Tele & Rad #GB–1587–2–1 term., 2 #GG–1589–2 ceramic bushings, 1 #GR–1588–2 silicon rubber grommet, and 1 #GB–1590–2–1 eyelet, supplied unassembled; Fed Tele & Rad part/dwg #GA–1584–2.	Feedthrough terminal posts for wiring.	3G290–19
E313	(*)	(*)	(*)	(*)	(*)	(*)	(*)	(*)	(*)	(*)	(*)	(*)	(*)	(*)	(*)	LAMP, incandescent: 1.35 v, .06 amp; bulb T–1¾ clear; ⅝'' lg; single cont midget flanged base; C–6 tungsten fil; burn any position; GE #331, Fed Tele & Rad part/dwg #GH–1992–2.	Dial illuminating lamp	2Z5877–21
J313	(*)	(*)	(*)	(*)	(*)	(*)	(*)	(*)	(*)	(*)	(*)	(*)	(*)	(*)	(*)	LAMPHOLDER: for single cont midget fl base lamp; phenolic board w/metal cont clips and term.; 1¾'' lg x ¾'' wd x 1 9/32'' thk o/a; two .128'' dia ctb mtg holes on	Dial lamp socket	2Z5956.29

																	5/16″ mtg/c; term. at top side of mtg board; p/o Fed Tele & Rad #GA–1593–14 panel assy; Fed Tele & Rad part/dwg #GA–2228–2.		
M301	(*)	(*)		(*)	(*)	(*)	(*)	(*)	(*)	(*)	(*)	(*)	(*)	(*)	(*)	(*)	METER, arbitrary scale: Sig C type MR135001DCMA or MR1551D1DCAV: dc; range 0–1 ma; round plastic or metal panel mtg case, w/sq mtg fl; 1½″ max dia case, 1 3/16″ d in back of fl; 1¾″ sq fl, .334″ thk; accuracy ±3%; 100 mv drop across term.; calibrated for nonmagnetic panel; 10 white scale divisions on black background; first, ctr, last scale mark, and ¼″ tip of pointer are luminescent; self-contained; four .122″ dia mtg holes on 1.312″ x 1.312″ mtg/c; four #4–40 machine screw are incl, screws extend ½″ x .000″–.03125″ in back of fl nut and lockwasher on ea screw to hold face on meter during shipment, to be removed during assy; 2 solder lug term. on back of case; moisture resistant and wp, w/external black phenolic face plate w/red over ctr of scale opening; Weston model #1011 or Simpson Elec spec #3086; Fed Tele & Rad part/dwg #GT–3141–2.	Filament voltage and power output metering.	3F3299–16
M301			(*)														METER, arbitrary scale; Sig C type MR13-S001DCMA or MR1551D1DCAV; dc; range 0–1 ma; round plastic or metal panel mtg case w/sq mt fl; 1½″ max dia case, 1″ max d fl; 1¾″ sq fl .334 thk; accuracy ±3%; 100 mv drop across term.; calibrated for nonmagnetic panel; 10 white scale divisions on black background; first, ctr, last scale mark, and ¼″ tip of pointer are luminescent; self-contained; four .125″ dia mtg holes on 1.312″ x 1.312″ mtg/c; 2 solder lug term. on back of case moisture resistant and wp; Weston model #1011 or Simpson Elec spec #3086.	Filament voltage and power output metering.	3F3299–16

2. Identification Table of Parts for Receiver-Transmitters RT–66/GRC, RT–67/GRC, and RT–68/GRC—Continued

Ref symbol	RT–66/GRC					RT–67/GRC				RT–68/GRC						Name of part and description	Function of part	Signal Corps stock No.
	1	2	3	4	5	6	7	8	9	10	11	12	13	14	15			
H309, H310, H311, H312	(*)	(*)	(*)	(*)	(*)	(*)	(*)	(*)	(*)	(*)	(*)	(*)	(*)	(*)	(*)	NUT, castellated: steel, cad pl and olive drabe iridite; ⅜″–32 NS–2 x ⅛″ thk; ⅝″ OD; 4 slots 3/32″ wd x 3/64″ d spaced 90° apart; p/o Fed Tele & Rad #GA–1593–14 panel assy; Fed Tele & Rad part/dwg #GB–1106–2.	H309: VOLUME control mounting nut. H310: METER switch mounting unit. H311: DIAL LIGHT-OFF-ON-RING switch mounting nut. H312: SQUELCH–OFF control mounting nut.	6L3006–32S
H21, H22, H23, H24	(*)					(*)				(*)			(*)	(*)		NUT, castellated: brass, bright dip finish; ½″–13 NC–2; ¼″ thk; ⅝″ OD; 4 slots 3/32″ wd x 3/64″ d spaced 90° apart in top edge; Fed Tele & Rad part/dwg #GB–3821–2.	H21: Mounting nut for alternate L1 coil. H22: Mounting nut for alternate L3 coil. H23: Mounting nut for alternate L12 coil. H24: Mounting nut for alternate L16 coil.	
J308	(*)	(*)	(*)	(*)	(*)	(*)	(*)	(*)	(*)	(*)	(*)	(*)	(*)	(*)	(*)	POST, binding: push type; 33/64″ dia x 49/64″ lg above mtg surface; ¾″ lg x #6–32 NC–2 thd mtg stud; phenolic cap, nickel pl brass body; ⅛″ dia wire hole; D-shaped wire grip hole in cap; Eby cat. #8330; Fed Tele & Rad part/dwg #GM–2253–2.	Auxiliary connector	3Z737–57
A101	(*)	(*)	(*)	(*)	(*)	(*)	(*)	(*)	(*)	(*)	(*)	(*)	(*)	(*)	(*)	POST, supporting: toroid coil supporting post; brass, bright dip finish; hex. post shape; ⅝″ lg x ⅜″ across flats; thd hole axially through ctr, #8–32 NC–2 thd; Fed Tele & Rad part/dwg #GB–3093–2.	Audio reactor supporting post.	2Z7259–82
L108	(*)	(*)	(*)	(*)	(*)	(*)	(*)	(*)	(*)	(*)	(*)	(*)	(*)	(*)	(*)	REACTOR: audio; dual; term. 1 and 2, 225–250 mh; term. 3 and 4, 275–310 mh; term. 1 and 2, 270 ohms; term. 3 and 4, 280 ohms dc resistance; 500 v rms test; HS metal case; 1⅜″ lg x ⅞″ wd x 2½″ h o/a; two .128″ dia mtg holes on 1⅛″ mtg/c; 5 solder type stud term. on bottom of case; electrostatic shield between sect.; Fed Tele & Rad part/dwg #GH–1226–2.	V103 squelch reactor	3C315–153
L137	(*)	(*)	(*)	(*)	(*)	(*)	(*)	(*)	(*)	(*)	(*)	(*)	(*)	(*)	(*)	REACTOR: audio; 100 mh min; 30 ma dc; 13.5 ohms ±5% dc resistance; not cased; 800 turns #31 wire; 1⅜″ OD x ¼″ ID x ⅝″ thk; mts by means of ctr hole; 2	V105 microphone filter choke.	3C315–154

																	solder lug term. on side of coil; tropicalized; Fed Tele & Rad part/dwg #GH–3085–2.		
O301	(*)	(*)	(*)	(*)	(*)	(*)	(*)	(*)	(*)	(*)	(*)	(*)	(*)	(*)	(*)		RELAY, armature: cont arrangement 1C; cont rating lamp at 40 v dc; 1/16" dia palladium cont; single wdg; 6 v dc, pulls in at 4 v dc, max oper 8 v, dc, 39 ±3 ohms, noninductive wdg ins; solder lug term. on coil and cont; 1⅜" lg x 1" wd x 1 1/16" h o/a; two #6–32 NC–2 mtg holes on back side on ¾" mtg/c; fast acting; impr for tropical use; Dunco #181XAX100 or equal; Fed Tele & Rad part/dwg #GH–1604–12.	Antenna transfer relay	2Z7599A–243
O1	(*)	(*)	(*)	(*)	(*)	(*)	(*)	(*)	(*)	(*)	(*)	(*)	(*)	(*)	(*)		RELAY, armature: cont arrangement 3A; cont rating between term. 2 and 3, 60 ma at 300 v dc; term. 4 and 5, 25 ma at 500 v dc; term. 6 and 7, 10 ma at 150 v dc; palladium cont; single wdg, 6 v dc, pulls in at 4 v dc, max oper v 8 v dc; 39 ±3 ohms, noninductive wdg, ins; coil and cont leads terminate in solder lug term. on bottom of can; 1⅝" lg x 1 7/16" wd x 2 5/16" h o/a; three #6–32 x ¼" lg mtg studs on 1 5/16" x 1 3/16" mtg/c; fast acting; HS metal can; term. #1 marked w/brown dot, ckt dia, and part number on can; Adv Elec #A8769–1 Y or Dunco #181CXX100; Fed Tele & Rad part/dwg #GH–1360–2.	H-v relay	2Z7599A–242
O101	(*)	(*)	(*)	(*)	(*)	(*)	(*)	(*)	(*)	(*)	(*)	(*)	(*)	(*)	(*)		RELAY, armature: cont arrangement 2A2C; cont rating between term. 1 and 2, and 2 and 3 ea 5 ma at 100 v dc; 4 and 5, 2,000 ma at 50 v dc; 6 and 7, 80 ma at 50 v dc; 8 and 9, 40 ma at 150 v dc; and 9 and 10, 10 ma at 150 v dc; palladium cont; single wdg, 6 v dc, pulls in at 4 v dc, max oper v 8 v dc, 39 ±3 ohms, noninductive wdg, ins; coil and cont terminate in solder lug term. on bottom of can; 1⅝" lg x 1 7/16" wd x 2 5/16" h o/a; three #6–32 x ¼" lg mtg studs on 1 5/16" x 1 3/16" mtg/c; fast acting; HS metal can; term. #1 marked w/brown dot, ckt dia and part number marked on can; Dunco #181–BBX 100 or equal; Fed Tele & Rad part/dwg #GH–1361–2, spec #GS–1315–2.	Transmitter-receiver relay	2Z7599A–241

2. Identification Table of Parts for Receiver-Transmitters RT–66/GRC, RT–67/GRC, and RT–68/GRC—Continued

Ref symbol	RT-66/GRC					RT-67/GRC				RT-68/GRC						Name of part and description	Function of part	Signal Corps stock No.
	1	2	3	4	5	6	7	8	9	10	11	12	13	14	15			
R107, R148, R149, R56, R57	(*)	(*)	(*)	(*)	(*)	(*)	(*)	(*)	(*)	(*)	(*)	(*)	(*)	(*)	(*)	RESISTOR, fixed: comp; 10 ohms ±5%; ½ w; JAN type RC20BF100J.	R107: V102 filament coupling. R148: V108 filament voltage-dropping resistor. R149: V108 filament voltage-dropping resistor. R56: V7 filament resistor. R57: V8 filament resistor.	3RC20BF100J
	(*)	(*)	(*)	(*)	(*)	(*)	(*)	(*)	(*)	(*)	(*)	(*)	(*)	(*)	(*)			
	(*)	(*)	(*)	(*)	(*)	(*)	(*)	(*)	(*)	(*)	(*)	(*)	(*)	(*)	(*)			
			(*)	(*)														
			(*)	(*)														
R56, R57	(*)					(*)			(*)	(*)	(*)	(*)	(*)	(*)	(*)	RESISTOR, fixed: comp; 10 ohms ±10%; ½ w; JAN type RC20BF100K.	R56: V7, filament voltage dropping. R57: V8 filament voltage dropping.	3RC20BF100K
	(*)					(*)				(*)	(*)	(*)	(*)	(*)	(*)			
R176, R306	(*)	(*)	(*)	(*)	(*)	(*)	(*)	(*)	(*)	(*)	(*)	(*)	(*)	(*)	(*)	RESISTOR, fixed: comp; 12 ohms ±5%; ½ w; JAN type RC20BF120J. (For column 8, only early sets contain the component described above for R306.)	R176: V115 filament voltage-dropping resistor. R306: S301 metering.	3RC20BF120J
								(*)										
R124, R161	(*)	(*)	(*)	(*)	(*)	(*)	(*)	(*)	(*)	(*)	(*)	(*)	(*)	(*)	(*)	RESISTOR, fixed: comp; 18 ohms ±10%; ½ w; JAN type RC20BF180K.	R124: V104B filament voltage-dropping resistor. R161: V114 filament shunt.	3RC20BF180K
	(*)	(*)	(*)	(*)	(*)	(*)	(*)	(*)	(*)	(*)	(*)	(*)	(*)	(*)	(*)			
R25, R53	(*)	(*)	(*)	(*)	(*)	(*)	(*)	(*)	(*)	(*)	(*)	(*)	(*)	(*)	(*)	RESISTOR, fixed: comp; 20 ohms ±5%; ½ w; JAN type RC20BF200J.	R25: V5 filament voltage-dropping resistor. R53: V11 plate decoupling.	3RC20BF200J
	(*)	(*)	(*)	(*)	(*)	(*)	(*)	(*)	(*)	(*)	(*)	(*)	(*)	(*)	(*)			
R123	(*)	(*)	(*)	(*)	(*)	(*)	(*)	(*)	(*)	(*)	(*)	(*)	(*)	(*)	(*)	RESISTOR, fixed: comp; 22 ohms ±10%; ½ w; JAN type RC20BF220K.	V106 filament shunt	3RC20BF220K
R34, R35	(*)	(*)	(*)	(*)	(*)	(*)	(*)	(*)	(*)	(*)	(*)	(*)	(*)	(*)	(*)	RESISTOR, fixed: comp; 27 ohms ±5% ½ w; JAN type RC20BF270J.	R34: V7 filament shunt R35: V8 filament shunt.	3RC20BF270J
	(*)	(*)	(*)	(*)	(*)	(*)	(*)	(*)	(*)	(*)	(*)	(*)	(*)	(*)	(*)			
R304	(*)	(*)	(*)	(*)	(*)	(*)	(*)	(*)	(*)	(*)	(*)	(*)	(*)	(*)	(*)	RESISTOR, fixed comp; 30 ohms ±5%; ½ w; JAN type RC20BF300J.	R304: E313 decoupling	3RC20BF300J
R10	(*)	(*)	(*)	(*)	(*)	(*)	(*)	(*)	(*)	(*)	(*)	(*)	(*)	(*)	(*)	RESISTOR, fixed: comp; 33 ohms ±5%; ½ w; JAN type RC20BF330J.	V2 filament voltage-dropping resistor.	3RC20BF330J
R20						(*)	(*)	(*)	(*)							RESISTOR, fixed: comp; 68 ohms ±10%; ½ w; JAN type RC20BF680K.	V4 plate dropping	3RC20BF680K
R24, R56, R122, R177						(*)	(*)	(*)	(*)							RESISTOR, fixed: comp; 100 ohms ±10%; ½ w; JAN type RC20BF101K. (For column 2, only early sets contain the component described above for R56.)	R24: V5 plate dropping R56: Antenna loading. R122: V105 filament voltage-dropping resistor. R177: V102 filament decoupling.	3RC20BF101K
		(*)																
			(*)															
	(*)		(*)	(*)	(*)	(*)	(*)	(*)	(*)	(*)	(*)	(*)	(*)	(*)	(*)			

| | | |

2. *Identification Table of Parts for Receiver-Transmitters RT–66/GRC, RT–67/GRC, and RT–68/GRC*—Continued

Ref symbol	RT–66/GRC					RT–67/GRC				RT–68/GRC						Name of part and description	Function of part	Signal Corps stock No.
	1	2	3	4	5	6	7	8	9	10	11	12	13	14	15			
R108	(*)	(*)	(*)	(*)	(*)	(*)	(*)	(*)	(*)	(*)	(*)	(*)	(*)	(*)	(*)	RESISTOR, fixed: comp; 1,500 ohms ±10%; ½ w; JAN type RC20BF152K.	V102 RETRANS AUDIO output load.	3RC20BF152K
R51		(*)														RESISTOR, fixed: comp; 1,800 ohms ±10%; 1 w; JAN type RC30BF182K. (For column 2, only later sets contain the component described above for R51.)	V11 grid leak	3RC30BF182K
R30,	(*)	(*)	(*)	(*)	(*)	(*)	(*)	(*)	(*)	(*)	(*)	(*)	(*)	(*)	(*)	RESISTOR, fixed: comp; 2,200 ohms ±10%; ½ w; JAN type RC20BF222K.	R30: V6 screen decoupling.	3RC20BF222K
R143,	(*)																R143: V109 filament shunt.	
R39	(*)		(*)	(*)	(*)												R39: V10 voltage divider.	
R46	(*)		(*)	(*)	(*)											RESISTOR, fixed: comp; 2,200 ohms ±10%; ½ w; JAN type RC30BF222K.	V10 screen voltage-dropping resistor.	3RC30BF222K
R40		(*)				(*)	(*)	(*)	(*)	(*)	(*)	(*)	(*)	(*)	(*)	RESISTOR, fixed: comp; 2,700 ohms ±5%; ½ w; JAN type RC20BF272J.	V9 and V10 voltage divider.	3RC20BF272J
R52,		(*)					(*)	(*)	(*)		(*)	(*)	(*)			RESISTOR, fixed: comp; 3,300 ohms ±10%; 1 w; JAN type RC30BF332K. (For column 8, only later sets contain the component described above for R51.)	R52: V11 screen voltage-dropping resistor.	3RC30BF332K
R51							(*)	(*)	(*)								R51: V11 grid dropping.	
R52				(*)	(*)											RESISTOR, fixed: comp; 4,300 ohms ±10%; 1 w; JAN type RC30BF432K.	V11 screen voltage-dropping resistor.	3RC30BF432K
R52	(*)		(*)													RESISTOR, fixed: comp; 4,300 ohms ±5% 2 w; JAN type RC42BF432J.	V11 screen voltage-dropping resistor.	3RC42BF432J
R52						(*)				(*)				(*)	(*)	RESISTOR, fixed: comp; 3,300 ohms ±10%; 2 w; JAN type RC42BF332K.	V11 screen voltage-dropping resistor.	3RC42BF332K
R21,	(*)	(*)	(*)	(*)	(*)	(*)	(*)	(*)	(*)	(*)	(*)	(*)	(*)	(*)	(*)	RESISTOR, fixed: comp; 4,700 ohms ±10%; ½ w; JAN type RC20BF472K.	R21: V4 screen voltage-dropping resistor.	3RC20BF472K
R119,	(*)	(*)	(*)	(*)	(*)	(*)	(*)	(*)	(*)	(*)	(*)	(*)	(*)	(*)	(*)		R119: V105 screen voltage-dropping resistor.	
R120,	(*)	(*)	(*)	(*)	(*)	(*)	(*)	(*)	(*)	(*)	(*)	(*)	(*)	(*)	(*)		R120: V106 screen voltage-dropping resistor.	
R137,	(*)	(*)	(*)	(*)	(*)	(*)	(*)	(*)	(*)	(*)	(*)	(*)	(*)	(*)	(*)		R137: V108 screen voltage-dropping resistor.	
R23										(*)	(*)	(*)	(*)	(*)	(*)		R23: V4 grid resistor.	
R51						(*)		(*)		(*)	(*)	(*)	(*)	(*)	(*)	RESISTOR, fixed: comp; 5,100 ohms ±5%; 1 w; JAN type RC30BF512J. (For column 8, only early sets contain the component described above for R51.)	V11 grid voltage-dropping resistor.	3RC30BF512J
R28,	(*)	(*)	(*)	(*)	(*)	(*)	(*)	(*)	(*)	(*)	(*)	(*)	(*)	(*)	(*)	RESISTOR, fixed: comp; 6,200 ohms ±5%; ½ w; JAN type RC20BF622J. (For column 14, only sets serial numbered 20,349 and below contain the component described above for R47 and R48.)	R28: V5 filament metering.	3RC20BF622J
R47,	(*)	(*)			(*)	(*)	(*)	(*)	(*)	(*)	(*)	(*)	(*)	(*)			R47: V9 filament metering.	
R48	(*)	(*)			(*)	(*)	(*)	(*)	(*)	(*)	(*)	(*)	(*)	(*)			R48: V10 filament metering.	

| | | |

2. Identification Table of Parts for Receiver-Transmitters RT–66/GRC, RT–67/GRC, and RT–68/GRC—Continued

Ref symbol	RT–66/GRC					RT–67/GRC				RT–68/GRC						Name of part and description	Function of part	Signal Corps stock No.
	1	2	3	4	5	6	7	8	9	10	11	12	13	14	15			
R125			(*)	(*)										(*)	(*)	RESISTOR, fixed: comp; 5,600 ohms ±10%; ½ w; JAN type RC20BF562K. (For column 14, only sets serial numbered 20,350 and above contain the component described above for R125 and R142.)	R125: V104B filament metering. R142: V109 filament metering.	3RC20BF562K
R142			(*)	(*)										(*)	(*)			
R3		(*)	(*)			(*)	(*)	(*)		(*)	(*)	(*)	(*)	(*)	(*)	RESISTOR, fixed: comp; 15,000 ohms ±10%; ½ w; JAN type RC20BF153K. (For column 14, only sets serial numbered 20,249 and below contain the component described above for R46.) (For column 2, only early sets contain the component described above for R3.)	R3: V1 screen voltage divider. R117: V105 and V106 grid bias resistor, part of T104. R308: R-f metering. R46: V109 decoupling.	3RC20BF153K
R117	(*)	(*)	(*)	(*)	(*)	(*)	(*)	(*)	(*)	(*)	(*)	(*)	(*)	(*)	(*)			
R308										(*)	(*)	(*)	(*)	(*)	(*)			
R46										(*)	(*)	(*)		(*)				
R42,	(*)	(*)	(*)	(*)	(*)	(*)	(*)	(*)	(*)	(*)	(*)	(*)	(*)	(*)	(*)	RESISTOR, fixed: comp; 18,000 ohms ±10%; ½ w; JAN type RC20BF183K. (For column 12, only sets serial numbered 20,350 and above contain the component described above for R46.)	R42: V10 grid resistor	3RC20BF183K
R115,	(*)	(*)	(*)	(*)	(*)	(*)	(*)	(*)	(*)	(*)	(*)	(*)	(*)	(*)	(*)		R115: V105 plate load. R140: V109 decoupling. R147: V110 grid bias resistor, part of T110. R154: V111 grid bias resistor, part of T112. R158: V112 grid bias resistor, part of T112. R46: V10 screen dropping.	
R140,	(*)	(*)	(*)	(*)	(*)	(*)	(*)	(*)	(*)	(*)	(*)	(*)	(*)	(*)	(*)			
R147,	(*)	(*)	(*)	(*)	(*)	(*)	(*)	(*)	(*)	(*)	(*)	(*)	(*)	(*)	(*)			
R154,	(*)	(*)	(*)	(*)	(*)	(*)	(*)	(*)	(*)	(*)	(*)	(*)	(*)	(*)	(*)			
R158,	(*)	(*)	(*)	(*)	(*)	(*)	(*)	(*)	(*)	(*)	(*)	(*)	(*)	(*)	(*)			
R46													(*)	(*)	(*)			
R11,	(*)	(*)	(*)	(*)	(*)	(*)	(*)	(*)	(*)	(*)	(*)	(*)	(*)	(*)	(*)	RESISTOR, fixed: comp; 22,000 ohms ±10%; ½ w; JAN type RC20BF223K.	R11: V2 screen dropping	3RC20BF223K
R32,	(*)	(*)	(*)	(*)	(*)	(*)	(*)	(*)	(*)	(*)	(*)	(*)	(*)	(*)	(*)		R32: V7 grid resistor. R33: V8 grid resistor. R46: V10 screen dropping.	
R33,	(*)	(*)	(*)	(*)	(*)	(*)	(*)	(*)	(*)	(*)	(*)	(*)	(*)	(*)	(*)			
R46		(*)				(*)	(*)	(*)	(*)									
R141	(*)	(*)	(*)	(*)	(*)	(*)	(*)	(*)	(*)	(*)	(*)	(*)	(*)	(*)	(*)	RESISTOR, fixed: comp; 27,000 ohms ±10%; ½ w; JAN type RC20BF273K.	V109 grid resistor	3RC20BF273K
R128,		(*)														RESISTOR, fixed: comp; 33,000 ohms ±10%; ½ w; JAN type RC20BF333K.	R128: V104B grid resistor. R6: V2 grid bias resistor.	3RC20BF333K
R6										(*)	(*)	(*)	(*)	(*)	(*)			
R129		(*)														RESISTOR, fixed: comp; 36,000 ohms ±5%; ½ w; JAN type RC20BF363J.	V104B plate voltage-dropping resistor.	3RC20BF363J
R29,	(*)	(*)	(*)	(*)	(*)	(*)	(*)	(*)	(*)							RESISTOR, fixed: comp; 39,000 ohms ±10%; ½ w; JAN type RC20BF393K. (For column 5, only sets numbered 2716 and up contain the component described above for R183.)	R29: V6 screen voltage-dropping resistor. R183: V110 plate and screen dropping. R168: V133 and V114 load circuit balancing.	3RC20BF393K
R183,	(*)		(*)	(*)	(*)													
R168	(*)	(*)	(*)	(*)	(*)	(*)	(*)	(*)	(*)	(*)	(*)	(*)	(*)	(*)	(*)			

| | | |

2. Identification Table of Parts for Receiver-Transmitters RT–66/GRC, RT–67/GRC, and RT–68/GRC—Continued

Ref symbol	RT–66/GRC					RT–67/GRC				RT–68/GRC						Name of part and description	Function of part	Signal Corps stock No.
	1	2	3	4	5	6	7	8	9	10	11	12	13	14	15			
R174,	(*)	(*)	(*)	(*)	(*)	(*)	(*)	(*)	(*)	(*)	(*)	(*)	(*)	(*)	(*)	RESISTOR, fixed: comp; 150,000 ohms ±10%; ½ w; JAN type RC20BF154K.	R174: Coupling for squelch oscillator to first audio, V115.	3RC20BF154K
R175						(*)			(*)	(*)	(*)	(*)		(*)	(*)	(For columns 11 and 12, only sets serial numbered 9676 and above, and 16668 and above, respectively, contain the component described above for R175.)	R175: V113 coupling output of discriminator to volume control.	
R113,	(*)	(*)	(*)	(*)	(*)		(*)	(*)	(*)							RESISTOR, fixed: comp; 180,000 ohms ±10%; ½ w; JAN type RC20BF184K. (For column 9, only sets serial numbered 13671 and below contain the component described above for R113. For columns 2 and 13, only later sets and sets serial numbered 1882 and below, respectively, contain the component described above for R179. For column 2, only later sets contain the component described above for R116 and R118.)	R113: V103 grid resistor.	3RC20BF184K
R132,	(*)	(*)	(*)	(*)	(*)	(*)	(*)	(*)	(*)	(*)	(*)	(*)	(*)	(*)	(*)		R132: V107 grid resistor, part of T107.	
R135,	(*)	(*)	(*)	(*)	(*)	(*)	(*)	(*)	(*)	(*)	(*)	(*)	(*)	(*)	(*)		R135: V108 grid resistor, part of T108.	
R139	(*)	(*)	(*)	(*)	(*)	(*)	(*)	(*)	(*)	(*)	(*)	(*)	(*)	(*)	(*)		R139: V109 grid resistor.	
R144,	(*)	(*)	(*)	(*)	(*)	(*)	(*)	(*)	(*)	(*)	(*)	(*)	(*)	(*)	(*)		R144: V109 plate loading, part of T110.	
R146,	(*)	(*)	(*)	(*)	(*)	(*)	(*)	(*)	(*)	(*)	(*)	(*)	(*)	(*)	(*)		R146: V110 grid bias resistor, part of T110.	
R151,	(*)	(*)	(*)	(*)	(*)	(*)	(*)	(*)	(*)	(*)	(*)	(*)	(*)	(*)	(*)		R151: V110 plate loading, part of T111.	
R153,	(*)	(*)	(*)	(*)	(*)	(*)	(*)	(*)	(*)	(*)	(*)	(*)	(*)	(*)	(*)		R153: V111 grid bias resistor, part of T111.	
R155,	(*)	(*)	(*)	(*)	(*)	(*)	(*)	(*)	(*)	(*)	(*)	(*)	(*)	(*)	(*)		R155: V111 plate loading, part of T112.	
R157,	(*)	(*)	(*)	(*)	(*)	(*)	(*)	(*)	(*)	(*)	(*)	(*)	(*)	(*)	(*)		R157: V112 grid bias resistor, part of T112.	
R164,	(*)	(*)	(*)	(*)	(*)	(*)	(*)	(*)	(*)	(*)	(*)	(*)	(*)	(*)	(*)		R164: V113 diode load.	
R165,	(*)	(*)	(*)	(*)	(*)	(*)	(*)	(*)	(*)	(*)	(*)	(*)	(*)	(*)	(*)		R165: V114 diode load.	
R179,	(*)	(*)	(*)	(*)	(*)		(*)	(*)					(*)				R179: V103 grid load.	
R307,	(*)	(*)	(*)	(*)	(*)	(*)	(*)	(*)	(*)	(*)	(*)	(*)	(*)	(*)	(*)		R307: Decoupling resistor.	
R116,	(*)	(*)	(*)	(*)	(*)	(*)	(*)	(*)	(*)	(*)	(*)	(*)	(*)	(*)	(*)		R116: V105 decoupling between discriminator and transmitter reactance.	
R118	(*)	(*)	(*)	(*)	(*)	(*)	(*)	(*)	(*)	(*)	(*)	(*)	(*)	(*)	(*)		R118: V106 decoupling between discriminator and transmitter reactance.	
R179						(*)			(*)	(*)	(*)	(*)	(*)	(*)	(*)	RESISTOR, fixed: comp; 180,000 ohms ±5%; ½ w; JAN type RC20BF184J. (For column 13, only sets serial numbered 1883 and above contain the component described above for R179.)	V103 grid load	3RC20BF184J

| | | |

2. *Identification Table of Parts for Receiver-Transmitters RT–66/GRC, RT–67/GRC, and RT–68/GRC*—Continued

Ref symbol	RT-66/GRC					RT-67/GRC				RT-68/GRC						Name of part and description	Function of part	Signal Corps stock No.
	1	2	3	4	5	6	7	8	9	10	11	12	13	14	15			
R23, R104, R110, R111, R166, R180, R55	(*)	(*)	(*)	(*)	(*)	(*)	(*)	(*)	(*)							RESISTOR, fixed: comp; 1 meg ±10%; ½ w; JAN type RC20BF105K. (For columns 11 and 12, only sets serial numbered 9675 and below, and 16667 and below, respectively, contain the component described above for R111. For column 13, only sets serial numbered 1882 and below, contain the component described above as R111. For column 2, only early sets contain the component described above for R104 and R110.)	R23: V5 grid resistor. R104: V102 coupling to squelch oscillator. R110: V103 diode load. R111: V103 voltage divider. R166: V102 and V114 isolating resistor. R180: V1 Feedback voltage dropping. R55: V1 AGC Feedback.	3RC20BF105K
	(*)	(*)	(*)	(*)	(*)			(*)			(*)	(*)	(*)					
	(*)	(*)	(*)	(*)	(*)	(*)	(*)	(*)	(*)	(*)	(*)	(*)	(*)	(*)	(*)			
						(*)	(*)	(*)	(*)	(*)	(*)	(*)	(*)	(*)	(*)			
						(*)	(*)	(*)	(*)									
R111							(*)		(*)	(*)	(*)	(*)	(*)	(*)	(*)	RESISTOR, fixed: comp; 2.2 meg ±10%; ½ w; JAN type RC20BF225K. (For columns 11 and 12, and 13, only sets serial numbered 9676 and above, 16668 and above, and 1883 and above, respectively, contain the component described above for R111.)	V103 grid bias	3RC20BF225K
R106		(*)														RESISTOR, fixed: comp; 3.9 meg ±10%; ½ w; JAN type RC20BF395K.	V113 coupling from discriminator to retransmission audio.	3RC20BF395K
R55	(*)	(*)	(*)	(*)	(*)											RESISTOR, fixed: comp; 2.2 meg ±10%; 1/2 w; JAN type RC20BF225K.	V1 coupling from SQUELCH to receiver r-f amplifier.	3RC20BF225K
R130	(*)	(*)	(*)	(*)	(*)	(**)	(*)	(*)	(*)	(*)	(*)	(*)	(*)	(*)	(*)	RESISTOR, fixed: comp; 15 ohms ±10%; 1 w; JAN type RC30BF150K.	V106 microphone current limiter.	3RC30BE150K
R303	(*)	(*)	(*)	(*)	(*)	(*)	(*)	(*)	(*)	(*)	(*)	(*)	(*)	(*)	(*)	RESISTOR, variable: comp; 500,000 ohms ±20%; 2 w; 70° C max continuous oper temp; 3 solder lugs; metal case 1 1/16" dia x 2 1/32" d, incl; double flatted metal shaft ¼" dia x 2 3/32" lg w/axially tapped #6–32 hole ¼" dia in end; AB type #A taper, 1% resistance at 30% rotation, 5% at 40%, 10% at 50%, 20% at 60%, 40% at 70%; 65% at 80%, 92% at 90%; insul cont arm; w/o off position; normal torque; 3/32" lg x 3/8"–32 bushing; nonturn device on 1 1/32" rad at 9 o'clock; tropicalized and salt water resistant, wp seal in bushing and mtg collar; AB type #JW,	Volume control	3Z7498–50.142

																	modified; Fed Tele & Rad part/dwg #GH–1627–2.		
R103, R128	(*) (*)	(*)	(*) (*)	(*) (*)	(*) (*)	(*) (*)	(*) (*)	(*) (*)	(*) (*)	(*) (*)	(*) (*)	(*) (*)	(*) (*)	(*) (*)	(*) (*)	(*) (*)	RESISTOR, variable: comp; 500,000 ohms ±20%; 2 w; 70° C max continuous oper temp; 3 solder lugs; metal case 1 1/16" dia x 5/16" wd, incl; round metal shaft w/scdr slot, 1/4" dia x 5/8" lg; AB type #A taper, 1% resistance at 30% rotation, 5% at 40%, 10% at 50%; 20% at 60%; 40% at 70%; 65% at 80%; 92% at 90%; ins cont arm w/o off position; normal torque, w/shaft locking device; 1/2" lg x 3/8"–32 bushing, nonturn device on 17/32" rad at 9 o'clock; tropicalized and salt water resistant; AB type #SD–40406; Fed Tele & Rad part/dwg #GH–1565–2.	R103: V102 grid coupling to squelch oscillator. R128: Ringer oscillator, 1,600-cycle frequency adjust (internal).	3Z7498–50.122
R302	(*)		(*)	(*)	(*)												RESISTOR, variable: comp; 500,000 ohms ±20%; 1/4 w; 70° C max continuous oper temp; 3 solder lug term.; metal case 15/16" dia x 1 51/64" lg; incl round metal shaft w/double flats on end; shaft 1/4" dia x 23/32" lg w/axially tapped #6–32 hole 1/4" d in end; total resistance 500,000 ohms ±20%; CTS standard D taper; resistance between term. 1 and 2 when shaft is at 50% rotation ±3%, 250,000 ohms ±20%; ins cont arm w/o off position; normal torque; 9/32" lg x 3/8"–32 bushing; nonturn device; switch, normally open, oper at start of rotation, 2 amp, 125 v, 2 solder lug. term.; tropicalized and salt water resistant, wp seal in bushing and mtg collars; CTS type GC–45.	SQUELCH control	3Z7498–50.143
R302		(*)				(*)	(*)	(*)	(*)	(*)	(*)	(*)	(*)	(*)	(*)	(*)	RESISTOR, variable: comp; 2 sect.; ea sect. 500,000 ohms ±20%; ea sect. 2 w, 70° max continuous oper temp; 3 solder lugs ea sect.; metal case 1 1/16" dia x 1 3/8" lg, incl; round metal shaft w/double flats on end, shaft 1/4" dia x 23/32" lg w/axially tapped #6–32 hole 1/4" d in end; front sect. AB type #S taper, 4% taper resistance at 20% rotation, 50% at 30%, 33% at 40%, 50% at 50%, 70% at 60%; 90% at 70%, 98% at 90% rear sect., extreme ccw position 1% of total resistance, 455,000 ohms ±20% at 50% rotation,	SQUELCH control	3F498–50.143

2. *Identification Table of Parts for Receiver-Transmitters RT–66/GRC, RT–67/GRC, and RT–68/GRC*—Continued

Ref symbol	RT-66/GRC					RT-67/GRC				RT-68/GRC						Name of part and description	Function of part	Signal Corps stock No.
	1	2	3	4	5	6	7	8	9	10	11	12	13	14	15			
																RESISTOR, variable—Continued 10,000 ohms at extreme cw position; normal torque; 9/32″ lg x −32 bushing, nonturn device on 17/32″ lg x 3/8″. −32 bushing, nonturn device on 17/32″ rad at 9 o'clock; SPST switch, normally open, oper at start or rotation, 2 amp, 125 v, 2 solder lug term.; tropicalized and salt water resistant, wp seal in bushing and mtg collar; AB type #JJSW, modified; Fed Tele & Rad part/dwg #GH–16492.		
O321, O322	(*) (*)	(*) (*)	(*) (*)	(*) (*)	(*) (*)	(*) (*)	(*) (*)	(*) (*)	(*) (*)	(*) (*)	(*) (*)	(*) (*)	(*) (*)	(*) (*)	(*) (*)	SEAL, water: Buna N; circular w/circular cross section: 5/8″ OD x 7/16″ ID x 3/32″ thk; Linear Inc part #1820–9; Fed Tele & Rad part/dwg #GS–1948–1–8.	Dial drive shaft waterproof seals.	6Z8093–13
H401 through H404	(*)	(*)	(*)	(*)	(*)	(*)	(*)	(*)	(*)	(*)	(*)	(*)	(*)	(*)	(*)	SCREW, captive: slot drive; cheese head, finished .312″ dia ±.005″, 1/32″ x 45° chamfer, head 1 15/64″ lg; cad pl and green iridited steel; #10–32 NF–2; 2½″ lg; thd portion 3/8″ lg; head .312″ dia x 1 15/64″ lg; slotted groove ground head portion .043″ wd x .031″ d, 1 1/16″ from bottom edge of head, cone points; p/o Fed Tele & Rad #GA–1498–12 and #GA–1698–12 back pl assy; Fed Tele & Rad part/dwg #GB–1493–2.	Back plate chassis mounting screws.	6L4770–40.86C
H313, H314	(*)	(*)	(*)	(*)	(*)	(*)	(*)	(*)	(*)	(*)	(*)	(*)	(*)	(*)	(*)	SCREW, captive: slot drive; round head finished per dwg; steel, cad pl and olive drab iridited; #6–32 NC–2; 5/8″ lg thd for 3/16″ of lg; head .260″ max dia x .103″ max thk, slot .045″ wd x .067″ d max; p/o Fed Tele & Rad #GA–2632–12 cover subassy; Fed Tele & Rad part/dwg #GB–2635–2.	Retainer plate mounting screws.	6L4766–10.495
H405 through H408	(*)	(*)	(*)	(*)	(*)	(*)	(*)	(*)	(*)	(*)	(*)	(*)	(*)	(*)	(*)	SCREW, machine: slot drive; hex. head, unfinished; steel, cad pl and green iridited; #10–32 NF–2; 7/8″ lg; thd entire lg; slot in head .047″ wd x .062″ d; Fed Tele & Rad part/dwg #GB–2439–2.	Chassis-to-panel mounting screws.	6L7032–14.81CS

H1, H2	(*)	(*)	(*)	(*)	(*)	(*)	(*)	(*)	(*)	(*)	(*)	(*)	(*)	(*)	(*)	SCREW, machine: slot drive; hex. head, unfinished; steel, cad pl and olive drab iridited; #6–32 NC, 2; ¼″ lg; head ¼″ across flats x 7/64″ thk, slot 1/32″ wd x 1/16″ d; p/o Fed Tele & Rad #GA–1515–12 parts 1, 2, and 3 switch assy; Fed Tele & Rad part/dwg #GB–2301–2.	Crystal switch shaft assembly mounting screws.	6L6632–4.81CS
O305	(*)	(*)	(*)	(*)	(*)	(*)	(*)	(*)	(*)	(*)	(*)	(*)	(*)	(*)	(*)	SHAFT: p/o Fed Tele & Rad #GA–1593–14 panel assy; c/o 1 Fed Tele & Rad #GB–1561–2 plunger and 1 #GB–1563–2 key; SS, passivated; mts in 7/16″ hole in panel; key end has axial hex. hole .197″ across flats, 3/8″ d; key held to plunger w/piece of wire until assy in equipment, scdr slot in headed portion of plunger and shoulder .403″ x .093″ thk, .2195″ down from slotted end; Fed Tele & Rad part/dwg #GA–2446–2.	Variable cam adjusting plunger shaft.	2Z8204–178
O103	(*)	(*)	(*)	(*)	(*)	(*)	(*)	(*)	(*)	(*)	(*)	(*)	(*)	(*)	(*)	SHAFT: coupling shaft; brass rod, acid dip finish; .25″ dia x 1⅝″ mts in ¼″ dia clearance hole; both ends chamfered ¼″ x 45°; Fed Tele & Rad part/dwg #GB–2571–2.	Coupling shaft	2Z8204–176
O6	(*)	(*)	(*)	(*)	(*)	(*)	(*)	(*)	(*)	(*)	(*)	(*)	(*)	(*)	(*)	SHAFT: coupling shaft; p/o Fed Tele & Rad #GA–1672–14 rf chassis assy SS rod; .187″ dia x 5⅛″ lg; both ends chamfered 1/32″ x 1/32″; mts in .189″ dia hole in coupling; Fed Tele & Rad part/dwg #GB–2541–2.	Coupling shaft	2Z8204–177
O306	(*)	(*)	(*)	(*)	(*)	(*)	(*)	(*)	(*)	(*)	(*)	(*)	(*)	(*)	(*)	SHAFT ASSEMBLY: flex; p/o Fed Tele & Rad #GA–1593–14 panel assy; c/o 1 Fed Tele & Rad #GB–1402–2–1 flex shaft w/one #GB–2530–2 fitting soldered on one end, one #GB–2808–2 fitting soldered on other end; phosphor bronze shaft, SS fittings; .468″ dia x 3 25/32″ lg o/a; mts through hole in panel by headed fitting .248″ dia, other end fitting .188″ dia mts in coupling hole; headed fitting has scdr slot; Fed Tele & Rad part/dwg #GA–1400–2–GR I.	Receiver antenna tuning adjusting shaft.	2Z8201.69
O307	(*)	(*)	(*)	(*)	(*)	(*)	(*)	(*)	(*)	(*)	(*)	(*)	(*)	(*)	(*)	SHAFT ASSEMBLY: flex; p/o Fed Tele & Rad #GA–1593–14 panel assy; c/o 1 Fed Tele & Rad #GB–1402–2–2 flex shaft w/one #GB–1403–2 fitting soldered on one end and one #GB–1401–2 fitting soldered on other end; phosphor bronze	Transmitter antenna coupling adjusting shaft.	2Z8201.70

2. *Identification Table of Parts for Receiver-Transmitters RT–66/GRC, RT–67/GRC, and RT–68/GRC*—Continued

Ref symbol	RT-66/GRC					RT-67/GRC				RT-68/GRC						Name of part and description	Function of part	Signal Corps stock No.
	1	2	3	4	5	6	7	8	9	10	11	12	13	14	15			
																SHAFT ASSEMBLY—Continued shaft, SS fittings; .468″ dia x 6 1/16″ lg o/a; mts through hole in panel by headed fitting .248″ dia, other end fitting .188″ dia mts in coupling hole; headed fitting has scdr slot; Fed Tele & Rad part/dwg #GA–1400–2–GR II.		
E1	(*)	(*)	(*)	(*)	(*)	(*)	(*)	(*)	(*)	(*)	(*)	(*)	(*)	(*)	(*)	SHIELD, tube: cad pl brass; round w/hole in top; bayonet push-on mtg; .81″ ID x 1 3/8″ lg; pressure coil spring inside; JAN type S0S3. *Note.* In RT-66/GRC models bearing Order No. 21434–Phila-50, JAN type S0S6 is changed to read TS102U02; JAN-S-28 is changed to read S-28A.	Tube shield	2Z8304.57
E2 through E10, E101 through E116	(*)	(*)	(*)	(*)	(*)	(*)	(*)	(*)	(*)	(*)	(*)	(*)	(*)	(*)	(*)	SHIELD, tube: cad pl brass; round w/hole in top; bayonet push-on mtg; .81″ ID x 1 3/4″ lg; pressure coil spring inside; JAN type S0S6. *Note.* In RT-66/GRC models bearing Order No. 21434–Phila-50, JAN type S0S6 is changed to read TS102U02; JAN-S-28 is changed to read S-28A.	Tube shields	2Z8304.154
O308	(*)	(*)	(*)	(*)	(*)	(*)	(*)	(*)	(*)	(*)	(*)	(*)	(*)	(*)	(*)	SLEEVE, spacer: p/o Fed Tele & Rad #GA–1593–14 panel assy; brass bright dip finish; tubular; .312″ OD x .25″ ID x .234″ lg; mts on shaft by ctr hole; Fed Tele & Rad part/dwg #GB–2454–2.	Flexible shaft spacer	2Z8552–65
J3	(*)	(*)	(*)	(*)	(*)	(*)	(*)	(*)	(*)	(*)	(*)	(*)	(*)	(*)	(*)	SOCKET, crystal: 4 round female cont; Cinch #9804.	Provides test points for the final stages of transmitter.	2Z8678
X21,										(*)	(*)	(*)	(*)	(*)	(*)	SOCKET, crystal: ceramic body; tropicalized; 2 round female silver pl phosphor bronze cont; rectangular w/round ends; 55/64″ lg x 3/8″ wd x 43/64″ h o/a; cont on .486″ ctr; one 1/8″ dia mtg hole ctr between cont; Fed Tele & Rad part/dwg #GH–1991–2.	Crystal sockets	2Z8672.80
X22,	(*)	(*)	(*)	(*)	(*)	(*)	(*)	(*)	(*)	(*)	(*)	(*)	(*)	(*)	(*)			
X23,	(*)	(*)	(*)	(*)	(*)	(*)	(*)	(*)	(*)	(*)	(*)	(*)	(*)	(*)	(*)			
X24,						(*)	(*)	(*)	(*)	(*)	(*)	(*)	(*)	(*)	(*)			
X25,	(*)	(*)	(*)	(*)	(*)	(*)	(*)	(*)	(*)	(*)	(*)	(*)	(*)	(*)	(*)			
X26,						(*)	(*)	(*)	(*)	(*)	(*)	(*)	(*)	(*)	(*)			
X27,	(*)	(*)	(*)	(*)	(*)	(*)	(*)	(*)	(*)	(*)	(*)	(*)	(*)	(*)	(*)			
X28,						(*)	(*)	(*)	(*)	(*)	(*)	(*)	(*)	(*)	(*)			
X29,	(*)	(*)	(*)	(*)	(*)					(*)	(*)	(*)	(*)	(*)	(*)			
X30,						(*)	(*)	(*)	(*)	(*)	(*)	(*)	(*)	(*)	(*)			
X31,	(*)	(*)	(*)	(*)	(*)					(*)	(*)	(*)	(*)	(*)	(*)			

| | | |

2. *Identification Table of Parts for Receiver-Transmitters RT–66/GRC, RT–67/GRC, and RT–68/GRC*—Continued

Ref symbol	RT–66/GRC					RT–67/GRC				RT–68/GRC						Name of part and description	Function of part	Signal Corps stock No.
	1	2	3	4	5	6	7	8	9	10	11	12	13	14	15			
O309	(*)	(*)	(*)	(*)	(*)	(*)	(*)	(*)	(*)	(*)	(*)	(*)	(*)	(*)	(*)	SPRING: helical compression type; .031″ dia SS spring wire; .327″ OD x 1″ lg; 8 turns; squared ends, ground; p/o Fed Tele & Rad #GA–1593–14 panel assy; Fed Tele & Rad part/dwg #GB–1562–2.	Plunger shaft return spring.	2Z8877.357
O401 through O404	(*)	(*)	(*)	(*)	(*)	(*)	(*)	(*)	(*)	(*)	(*)	(*)	(*)	(*)	(*)	SPRING: helical compression type; provides spring tension on mtg screw; .025″ cad pl olive drab iridited music wire; 1⅛″ lg x .381″ OD o/a; 10 turns; squared ends, ground; heat treated to remove hydrogen embrittlement; p/o Fed Tele & Rad #GA–1698–12 and #GA–1486–12 back plate assy; Fed Tele & Rad part/dwg #GB–1492–2.	Back plate mounting screw release springs.	2Z8877.356
O7	(*)	(*)	(*)	(*)	(*)	(*)	(*)	(*)	(*)	(*)	(*)	(*)	(*)	(*)	(*)	SPRING: helical extension type; .02″ dia spring temper SS wire; .766″ lg x 21″ OD o/a; 22 turns; parallel eye term.; .141″ ID on ⅝″ ctr; p/o Fed Tele & Rad #GA–1897–12 capacitor assy; Fed Tele & Rad part/dwg #GB–1887–2.	Gear assembly return spring.	2Z8877.353
O405 through O412	(*)	(*)	(*)	(*)	(*)	(*)	(*)	(*)	(*)	(*)	(*)	(*)	(*)	(*)	(*)	SPRING: loop type; strike for Dzus fastener; .08″ dia, olive drab iridited music wire; 1⅜″ lg x 5/32″ wd x .08″ thk o/a; two ends turned perpendicular at 90° angle to straight portion on 1/16″ rad; Dzus dwg #X–487; Fed Tele & Rad part/dwg #GB–2414–2.	Panel-to-case catch fastener strikes.	6Z8377–10
O8, O9, O10, O12	(*) (*) (*) (*)	(*) (*) (*) (*)		(*) (*) (*) (*)	(*) (*) (*) (*)	(*)	(*)	(*)	(*)		(*)	(*)				SPRING: loop type; .033″ dia cad pl and olive drab iridited music wire; 25/64″ lg x ¼″ wd x .037″ thk o/a; irregular shaped snap on type spring; snaps on stud and screw assy, exerts pressure on screw thd; p/o Fed Tele & Rad #GA–1671–14 rf coil box assy; Fed Tele & Rad part/dwg #GB–2007–2. (For columns 1 and 6, sets containing the coils described in the alternate descriptions for L1, L3, L12, and L16 do not contain the spring described above.)	Adjustable turning core tension springs.	2Z8877.358

S301	(*)	(*)	(*)	(*)	(*)	(*)	(*)	(*)	(*)	(*)	(*)	(*)	(*)	(*)	(*)	SWITCH, rotary: 1 pole, 12 position; single sect.; spring silver cont; plastic body; 1 9/16" lg x 1 1/4" wd x 5/16" d excluding term.; nonshorting cont; locking action; solder lug term.; bushing 3/8"-32 x 5/16" lg, shaft 1/4" dia x 1 1/16" lg from mtg surface; double flatted end and axially tapped hole #6-32 x 1/4" d in end; flush mtd; wp seal in mtg bushing and collar; Fed Tele & Rad part/dwg #GH-1414-2.	METER selector	3Z9825-92.3
S1	(*)	(*)	(*)	(*)	(*)	(*)	(*)	(*)	(*)	(*)	(*)	(*)	(*)	(*)	(*)	SWITCH, rotary: 1 pole, 18 position; single sect.; silver zinc alloy cont; plastic body; 1.718" dia x 3/4" lg o/a; nonlocking wiper action; solder lug term.; single hole mtg; bushing 3/8"-32 x 1/2" lg; shaft 1/4" dia x 1" lg from mtg surface; supplied w/lockwasher and hex. nut; Fed Tele & Rad part/dwg #GH-1423-2.	Crystal	3Z9825-92.2
S302	(*)	(*)	(*)	(*)	(*)	(*)	(*)	(*)	(*)	(*)	(*)	(*)	(*)	(*)	(*)	SWITCH, rotary: 5 pole, 3 position; single sect.; spring silver cont; plastic body; 1 9/16" lg x 1 1/4" wd x 5/16" d excluding term.; nonshorting cont; locking in cw position, spring loaded return from ccw to ctr position; solder lug term.; single hole mtg; bushing 3/8"-32 x 5/16" lg; shaft 1/4" dia x 1 1/16" lg from mtg surface, has double flatted end, axially tapped hole #6-32 x 1/4" d in end; wp seal in mtg bushing and collar; Fed Tele & Rad part/dwg #GH-1348-2.	DIAL LIGHT—OFF-ON-RING switch.	3Z9825-92.4
E66 through E73, E157 through E174	(*)	(*)	(*)	(*)	(*)	(*)	(*)	(*)	(*)	(*)	(*)	(*)	(*)	(*)	(*)	TERMINAL, lug: straight type w/2 bent-up soldering ears; brass, hot tin dipped; 27/64" lg x 7/32" wd x 3/32" h o/a; .12" dia mtg hole between ears, ears bent up at 45° angle; solder connects to wire, wrap-around type w/1/32" rad slots in either side of ears; p/o Fed Tele & Rad #GA-2106-14 chassis riveting assy; Fed Tele & Rad part/dwg #GB-2248-2-1.	Grounding terminal lugs	3Z12073-57
T115	(*)	(*)	(*)	(*)	(*)	(*)	(*)	(*)	(*)	(*)	(*)	(*)	(*)	(*)	(*)	TRANSFORMER, AF: plate coupling type; pri 19,000 ohms impedance CT, .005 amp dc; secd 600 ohms impedance CT, 600 v rms test; HS steel case, silicon steel core; 1 5/16" sq x 2 1/2" h o/a; turns ratio of pri to secd 5.54:1; freq response 250-2500 cyc, +2 db to −2 db; 6 solder type stud term. on bottom of case; two	Output transformer	2Z9632.585

2. *Identification Table of Parts for Receiver-Transmitters RT–66/GRC, RT–67/GRC, and RT–68/GRC*—Continued

Ref symbol	RT-66/GRC					RT-67/GRC				RT-68/GRC						Name of part and description	Function of part	Signal Corps stock No.
	1	2	3	4	5	6	7	8	9	10	11	12	13	14	15			
																TRANSFORMER, AF—Continued #6–32 x 1 5/64" lg mtg studs on diagonally opposite corners on 1 3/16" x 1 3/16" mtg/c; part number marked on top of case; Fed Tele & Rad part/dwg #GH–1202–2.		
T102, T114	(*) (*)	(*) (*)	(*) (*)	(*) (*)	(*) (*)	(*) (*)	(*) (*)	(*) (*)	(*) (*)	(*) (*)	(*) (*)	(*) (*)	(*) (*)	(*) (*)	(*) (*)	TRANSFORMER, AF: plate coupling type; pri 22,000 ohms impedance CT, .006 amp dc; secd #1, 600 ohms impedance CT, secd #2, 5200 ohms impedance CT, 500 v rms test; HS steel case, silicon steel core; 1 3/8" lg x 7/8" wd x 2 1/16" h o/a; 160 mw output; turns ratio, pri to secd #1, 6.28:1, pri to secd #2, 2.03:1; freq response +2 db to −2 db between 250 and 2500 cyc; 9 solder type stud term. on bottom of case; two .128" dia mtg holes on 1 1/8" mtg/c; part number marked on top of case; Fed Tele & Rad part/dwg #GH–1203–2.	T102: Retransmission audio coupling to B of J312. T114: Interstage coupling of first audio to power audio.	2Z9632.562
T105		(*)					(*)	(*)	(*)				(*)			TRANSFORMER, AF: plate coupling type; tank wdg term. 3 and 4 tuned to 1600 cyc ±5 cyc w/.036 μf in shunt w/Q greater than 25 and .015 amp dc in wdg; feedback wdg term. 1 and 2, deliver 50 v to 1 meg and grid; output wdg term. 5 and 6, deliver 2.2 v to 2400 ohms; 500 v rms test; HS steel case; molypermalloy core; 1 3/8" lg x 7/8" wd x 2 1/16" h o/a; turns ratio tank to output wdg 5.73:1, feedback to output wdg 17.87:1; 6 solder type stud term. on bottom of case; two .128" dia mtg holes on 1 1/8" mtg/c; part number marked on top of case; Fed Tele & Rad part/dwg #GH–1204–2.	Oscillator, 1,600-cycle	2Z9632.584
T105	(*)				(*)	(*)				(*)	(*)	(*)		(*)	(*)	TRANSFORMER, AF: plate coupling type; three wdg; wdg term. 1 and 2 & 3 and 4 tuned to 1600 +45 −35 cps w/1820 μμf in shunt; wdg term. 3 and 4 carry nom .0035 amp; wdg term. 1 and 2 feed 470,000 ohms; wdg term. 5 and 6 deliver 4.5 v ±1.5 v to 900-ohm load; 500 v rms	Oscillator, 1,600-cycle	2Z9632.681

																		test; upright HS steel case; 4750 nickel core; 1⅜" lg x ⅞" wd x 2$\frac{1}{16}$" h o/a incl term.; turns ratio of wdg term. 3 and 4 to 1 and 2, .321 ±2%; wdg term. 5 and 6 to 1 and 2, .0557 ±2%; 6 solder type stud term. on bottom of case; two .128" dia mtg holes on 1⅛" mtg/c; part number and term. designation marked on side of case; Fed Tele & Rad part/dwg #GH–3853–2.		
T105			(*)	(*)														TRANSFORMER, AF: plate coupling type; three wdg; wdg term. 1 and 2 tuned to 1600 cps w/1820 μμf in shunt; wdg term. 1 and 2 feed 470,000 ohms; wdg term. 5 and 6 deliver 4.5 v ±1.5 v thru .045 μf; 500 v rms test; upright HS steel case; 4750 nickel core; 1⅜" lg x ⅞" wd x 2$\frac{1}{16}$" h o/a incl term.; turns ratio wdg term. 3 and 4 to 1 and 2, .321 ±2%, wdg term. 5 and 6 to 1 and 2, .0557 ±2%; 6 solder type stud term. on bottom of case; two .128" dia mtg holes on 1⅛" mtg/c; part number and term. designation marked on side of case; p/o Lewyt part/dwg #LGH–1204–2.	Oscillator, 1,600-cycle	2Z9632.584
T106	(*)	(*)	(*)	(*)	(*)	(*)	(*)	(*)	(*)	(*)	(*)	(*)	(*)	(*)	(*)			TRANSFORMER, AF: input type; pri #1, 30 ohms impedance; pri #2,190 ohms impedance; secd 19,000 ohms impedance CT; 500 v rms test; HS steel case; silicon steel core; 1⅜" lg x ⅞" wd x 2$\frac{1}{16}$" h o/a; turns ratio pri #1 to secd, 1:22.8; pri #2 to secd, 1:10; freq response 250–2500 cyc, +2 db to −2 db; 7 solder type stud term. on bottom of case; two .128" dia mtg holes on 1⅛" mtg/c; part number marked on top of case; Fed Tele & Rad part/dwg #GH–1205–2.	Microphone coupling to 1,600-cps oscillator V104B.	2Z9631.393
T107	(*)	(*)	(*)	(*)	(*)	(*)	(*)	(*)	(*)	(*)	(*)	(*)	(*)	(*)	(*)			TRANSFORMER, IF: 5 mc; input; shielded; 1$\frac{7}{32}$" lg x $\frac{31}{32}$" wd x 2$\frac{17}{32}$" h o/a; powdered iron core; single tuned; adj iron core tuning; two #6–32 x $\frac{5}{32}$" lg mtg studs on diagonally opposite corners of base on .859" x .609" mtg/c; 6 solder type term., one is dummy; tropicalized; Muter #C–7320–1; Fed Tele & Rad part/dwg #GH–2343–12–1.	First mixer (receiver) grid mixer.	2Z9643.352

2. *Identification Table of Parts for Receiver-Transmitters RT–66/GRC, RT–67/GRC, and RT–68/GRC*—Continued

Ref symbol	RT–66/GRC					RT–67/GRC				RT–68/GRC						Name of part and description	Function of part	Signal Corps stock No.
	1	2	3	4	5	6	7	8	9	10	11	12	13	14	15			
T108	(*)	(*)	(*)	(*)	(*)	(*)	(*)	(*)	(*)	(*)	(*)	(*)	(*)	(*)	(*)	TRANSFORMER, IF: 5 mc; interstage; shielded; 1 7/32" lg x 3 1/32" wd x 2 17/32" h o/a; powdered iron core; single tuned; adj iron core tuning; two #6–32 x 9/32" lg mtg studs on diagonally opposite corners of base on .859" x .609" mtg/c; 6 solder type term., one is dummy; tropicalized; Muter #C–7320–2; Fed Tele & Rad part/dwg #GH–2343–12–2.	First and second variable i-f interstage tuning unit.	2Z9643.353
T109	(*)	(*)	(*)	(*)	(*)	(*)	(*)	(*)	(*)	(*)	(*)	(*)	(*)	(*)	(*)	TRANSFORMER, IF: 5 mc; interstage; shielded; 3 3/16" lg x 1 1/16" wd x 2 13/32" h o/a; powdered iron core; ea unit single tuned; adj iron core tuning; two .169" dia mtg holes on 2 7/8" mtg/c; 5 wire leads; tropicalized; c/o 2 shielded i-f transformers interwired and mtd on common base plate; Muter #C–7322; Fed Tele & Rad part/dwg #GH–1937–12.	Second variable i-f and second receiver mixer interstage tuning unit.	2Z9643.355
T110, T111, T112	(*)	(*)	(*)	(*)	(*)	(*)	(*)	(*)	(*)	(*)	(*)	(*)	(*)	(*)	(*)	TRANSFORMER, IF: 1.4 mc interstage; shielded; 1 7/32" lg x 3 1/32" wd x 2 17/32" h o/a; powdered iron core; pri and secd tuned; adj iron core tuning; two #6–32 x 9/32" lg mtg stud on diagonally opposite corners of base on .859" x .609" mtg/c; 6 solder type term.; tropicalized; Muter #C–7318; Fed Tele & Rad part/dwg #GH–2342–12–1.	T110: Mixer to first i-f coupling. T111: First i-f to first limiter coupling. T112: First to second limiter coupling.	2Z9642.126
T113	(*)	(*)	(*)	(*)	(*)	(*)	(*)	(*)	(*)	(*)	(*)	(*)	(*)	(*)	(*)	TRANSFORMER, IF: 1.4 mc; discriminator; shielded; 1 7/32" lg x 3 1/2" wd x 2 17/32" h o/a; powdered iron core; pri and secd tuned; adj iron core tuning; two #6–32 x 9/32" lg mtg studs on diagonally opposite corners of base on .859" x .609" mtg/c; 6 solder type term., one is dummy; tropicalized; Muter #C–7321; Fed Tele & Rad part/dwg #GII–2345–12.	Discriminator tuning unit	2Z9643.354
V113, V114	(*)	(*)	(*)	(*)	(*)	(*)	(*)	(*)	(*)	(*)	(*)	(*)	(*)	(*)	(*)	TUBE, electron: type 1A3; diode	Discriminators	2J1A3
V7, V8	(*)	(*)	(*)	(*)	(*)	(*)	(*)	(*)	(*)	(*)	(*)	(*)	(*)	(*)	(*)	TUBE, electron: type 1AE4; pentode; per Fed Tele & Rad spec/dwg #GH–1123–2.	Transmitter r-f amplifiers	2J1AE4

| | | |

2. *Identification Table of Parts for Receiver-Transmitters RT–66/GRC, RT–67/GRC, and RT–68/GRC*—Continued

Ref symbol	RT–66/GRC					RT–67/GRC				RT–68/GRC						Name of part and description	Function of part	Signal Corps stock No.
	1	2	3	4	5	6	7	8	9	10	11	12	13	14	15			
H315	(*)	(*)	(*)	(*)	(*)	(*)	(*)	(*)	(*)	(*)	(*)	(*)	(*)	(*)	(*)	WASHER, flat: LTS–E–4 natural phenolic; ⅝″ OD x .154″ ID x 1/16″ thk; p/o Fed Tele & Rad #GA–1593–14 panel assy; Fed Tele & Rad part/dwg #GG–2542–2.	Binding post insulating mounting washer.	6L52010–1
H3	(*)	(*)	(*)	(*)	(*)	(*)	(*)	(*)	(*)	(*)	(*)	(*)	(*)	(*)	(*)	WASHER, flat: brass, acid dip finish; ¾″ OD x .19″ ID x .04″ thk; p/o Fed Tele & Rad #GA–1897–12 capacitor assy; Fed Tele & Rad part/dwg #GB–1888–2.	Segment gear spacing washer.	6L50100–2
H4 through H9	(*)	(*)	(*)	(*)	(*)	(*)	(*)	(*)	(*)	(*)	(*)	(*)	(*)	(*)	(*)	WASHER, flat: LTS–E–5 natural phenolic; ⅛″ OD x .169″ ID x 1/32″ thk; p/o Fed Tele & Rad #GA–1671–14 r-f coil box assy; and #GA–1672–14 r-f chassis assy; Fed Tele & Rad part/dwg #GP–1903–2.	Insulating washers	6L52002–1
H101, H102	(*)	(*)	(*)	(*)	(*)	(*)	(*)	(*)	(*)	(*)	(*)	(*)	(*)	(*)	(*)	WASHER, flat: LTS–E–5 natural phenolic; round; 1 1/16″ OD x .17″ ID x 1/16″ thk; Fed Tele & Rad part/dwg #GP–3092–2.	Toroid coil insulating mounting washers.	6L52000–1
H316	(*)	(*)	(*)	(*)	(*)	(*)	(*)	(*)	(*)	(*)	(*)	(*)	(*)	(*)	(*)	WASHER, flat: steel, cad pl; round; 9/16″ OD x .315″ ID x .120″ thk o/a; incl dog; dog on outer edge .109″ wd x .12″ h, material of washer .062″ thk; Oak cat. #2394; Fed Tele & Rad part/dwg #GB–2453–2.	Dog washer, rotation stop	6L58425
H10 through H17	(*)	(*)	(*)	(*)	(*)	(*)	(*)	(*)	(*)	(*)	(*)	(*)	(*)	(*)	(*)	WASHER, flat: LTS–E–5 natural phenolic; 1 5/64″ OD x .116″ ID x .025 thk; p/o Fed Tele & Rad #GA–2457–2 and #GA–2458–2 board assy; Fed Tele & Rad part/dwg #GP–2383–2.	H10 through H17: Trimmer capacitor mountings. H18 through H20: Insulating mounting washers.	6L52001–1
H18 through H20										(*)	(*)	(*)	(*)	(*)	(*)			
H25, H26, H27, H28	(*)					(*)				(*)			(*)	(*)	(*)	WASHER, flat: rubber silicon white; round; 64″ OD x .515″ ID x .031″ thk; Fed Tele & Rad part/dwg #GR–38222.	H25: Mounting washer, alternate L1 coil. H26: Mounting washer, alternate L3 coil. H27: Mounting washer, alternate L12 coil. H28: Mounting washer, alternate L16 coil.	
	(*)					(*)				(*)			(*)	(*)	(*)			
	(*)					(*)				(*)			(*)	(*)	(*)			
	(*)					(*)				(*)			(*)	(*)	(*)			
H322, H323							(*)		(*)							WASHER, flat: SS, passivated; round .385″ OD x .255″ ID x .031″ thk; Fed Tele & Rad part/dwg #GB–3071–02.	H322: Knob retaining washer. H323: Knob retaining washer.	6L58024–1F
							(*)		(*)									

| | | |

2. *Identification Table of Parts for Receiver-Transmitters RT–66/GRC, RT–67/GRC, and RT–68/GRC*—Continued

Ref symbol	RT-66/GRC					RT-67/GRC				RT-68/GRC						Name of part and description	Function of part	Signal Corps stock No.
	1	2	3	4	5	6	7	8	9	10	11	12	13	14	15			
E307, E308	(*) (*)	(*) (*)	(*) (*)	(*) (*)	(*) (*)	(*) (*)	(*) (*)	(*) (*)	(*) (*)	(*) (*)	(*) (*)	(*) (*)	(*) (*)	(*) (*)	(*) (*)	KNOB ASSEMBLY: round w/extended bar; aluminum, olive drab enamel finish; mts on 7/16" dia double flatted hub; mts to shaft by single #10–32 NF–2 thd screw mtd axially through ctr of knob; 3½" lg x 2 5/16" wd x 1 11/16" h o/a; shaft hole 9/32" d; c/o 1 Fed Tele & Rad #GC–3074–12 knob, #GB–3077–2 screw, 1 #GB–3076–12 upper ratchet plate, 2 #GB–3075–12 stop arms, 1 #GA–3078–2 hub assy, and miscellaneous hdw; Fed Tele & Rad part/dwg #GA–3073–2.	E307: Tuning knob (MCS). E308: Tuning knob (TENTH MCS).	2Z5816.29
E326, E327	(*)	(*)	(*)	(*)	(*)	(*)	(*)	(*)	(*)	(*)	(*)	(*)	(*)	(*)	(*)	KNOB: round; naval brass, olive drab enamel finish; for ¼" dia shaft; fastens to shaft by spring; washers and retaining ring not supplied as part of knob; unmarked; ¾" OD x 9/16" h o/a; shaft hole extends through knob; three .098" dia x ⅛" d axial holes in bottom face on .281" rad, 90° apart, stop pin in bottom face; Fed Tele & Rad part/dwg #GA–3068–2.	Stop adjusting knobs	2Z5822–441
O327, O328	(*)	(*)	(*)	(*)	(*)	(*)	(*)	(*)	(*)	(*)	(*)	(*)	(*)	(*)	(*)	SPRING: helical compression type; .031" dia; SS spring temper wire; passivated; ⅜" lg x .327" OD x .265" ID; 5 turns; closed ends; Fed Tele & Rad part/dwg #GB–3072–2.	Knob tension springs	2Z8877.354
O329, O330	(*)	(*)	(*)	(*)	(*)	(*)	(*)	(*)	(*)	(*)	(*)	(*)	(*)	(*)	(*)	RING, retainer: tuning shaft O ring seal retainer; aluminum caustic etch finish; round; .875" OD x .439" ID x .189" thk; mts on shaft by ctr hole; upper outside edge chamfered; hole beveled 90° between faces from .439" dia at bottom to .475" dia at top; Fed Tele & Rad part/dwg #GB–3031–2.	Dial drive shaft waterproof seal retainers.	2Z7858–143
O331, O332	(*)	(*)	(*)	(*)	(*)	(*)	(*)	(*)	(*)	(*)	(*)	(*)	(*)	(*)	(*)	HUB: SS; passivated; round disk w/double flatted hollow round shaft extending from 1 side; 1 9/16" h; OD x .873" ID is double flatted hole .439" lg x .314" wd; mts by ctr hole; upper surface of disk portion has 120 equally spaced teeth; Fed Tele & Rad part/dwg #GA–3078–2.	Stop arm and knob mounting hubs.	2Z5180–28

| | | |

INDEX

	Paragraphs	Page
Alinement:		
Initial procedures	74	150
Mechanical	69	149
Receiver	75	151
Test equipment required	73	150
Transmitter	76	155
Antenna circuit, receiver	29	47
Application, system	4	10
Audio amplifier:		
First	37	61
Power	38	65
Retransmit	39	65
Block diagram:		
Receiver	16	29
Transmitter	15	28
Charts:		
Controls, instruments, and connectors	7	18
Filament circuit trouble localization	60	124
Operational check	56	110
Receiver-transmitter tracking check	59	123
Stage gain	61	124
Check of interunit strapping connections	64	141
Connectors	7	18
Control circuits	14, 41, 61	28, 72, 125
Controls	7	18
D-c voltage measurements	63	141
Demolition	86	164
Description:		
Accessory equipment	10	20
Additional equipment	8	19
Receiver-transmitter	6	12
Spare parts	9	20
Discriminator	36	58
Driver, transmitter	26	41
Filament circuits	42	74
Final testing:		
Band width check	83	161
Calibration	81	161
General	77	159
Limiting action	82	161
Over-all receiver sensitivity	78	159
Spurious response	80	160
Variable i-f selectivity	79	160
Forms	2	7
Frequency spectrum	3	8
Harmonic amplifier	12*a*, 23	21, 37
I-f amplifiers:		
Fixed, limiter circuit	35	54
Variable	32	51
Lubrication	70	150
Measuring circuits	44	77
Microphone input circuit	19	31
Mixer:		
Receiver, first	31	50
Receiver, second	34	54
Transmitter	24	38
Modulation	21	32
Nomenclature	1	7
Operational checks:		
Chart	56	110
Purpose of operational check chart	55	108
Test bench setup using power supply	54	105
Oscillator:		
Crystal	12*a*, 22	21, 35
Receiver	12*c*, 33	23, 53
Transmitter	12*b*, 20	22, 32
Plate supply circuits	43	75
Receiver-transmitter:		
Controls	7, 14	18, 28
Description	6	12
Differences	46	79
Purpose	3	8
Receiver-transmitter, theory:		
Block diagram	11	21
Control circuits	14, 41	28, 72
Crystal oscillator-harmonic generator	12*a*, 22	21, 35
Discriminator	36	58
Filament	42	74
First audio amplifier	37	61
Fixed i-f amplifier limiter circuit	35	54
General	11	21
Harmonic amplifiers	12*a*, 23	21, 37
Microphone input circuits	19, 41	31, 72
Modulation	21	32
Plate supply circuits	43	75
Power audio amplifier	38	65
Receiver antenna circuit	29	47
Receiver first mixer	31	50
Receiver oscillator	12*c*, 33	23, 53
Receiver r-f amplifier	30	47
Receiver second mixer	34	54
Retransmit audio amplifier	39	65
Ringer circuit	28	43
Squelch oscillator	40	66
Transmitter drivers	26	41
Trnasmitter mixer	24	38
Transmitter oscillator	12*b*, 20	22, 32
Transmitter power amplifier	27	41
Transmitter, r-f amplifier	25	39
Tuning arrangement	13	23
Variable i-f amplifiers	32	51

	Paragraphs	Page
Receiver trouble sectionalization chart	57	116
Records	2	7
Refinishing	72	150
Repacking for shipment or limited storage	85	164
Repairs:		
Disassembly	66	142
Reassembly	67	143
Replacement of parts	65	142
Special procedures	68	144
Resistance measurements	62	130
R-f amplifier, receiver	30	47
Ringer circuit	28	43
Rustproofing	71	150
Signal substitution	61	125
Squelch circuit	40	66
System wiring	45	78
Tables:		
First harmonic amplifier V4 frequencies	12	21
Receiver-transmitter crystal frequencies	12	21
Resistance measurements	62	130
Tuned circuits	13	23
Technical characteristics	5	11
Test circuits	17	31
Transmitter amplifier:		
Power	27	41
R-f	25	39
Transmitter trouble sectionalization chart	58	119
Troubleshooting:		
Checks of interunit strapping connections	64	141
D-c voltage measurements	63	141
Filament circuit trouble localization chart	60	124
Key circuits	53	104
Procedures	51	102
Receiver trouble sectionalization chart	57	116
Resistance measurements	62	130
Test equipment	52	103
Transmitter trouble sectionalization chart	58	119
Tuning arrangement	13	23
Weatherproofing	71	150

[AG 413.44 (3 Nov 53)]

BY ORDER OF THE SECRETARIES OF THE ARMY AND THE AIR FORCE:

M. B. RIDGWAY,
General, United States Army,
Chief of Staff.

OFFICIAL:
WM. E. BERGIN,
Major General, United States Army,
The Adjutant General.

N. F. TWINING,
Chief of Staff, United States Air Force.

OFFICIAL:
K. E. THIEBAUD,
Colonel, United States Air Force,
Air Adjutant General.

DISTRIBUTION:

Active Army:

Tech Svc (1); Tech Svc Bd (1); AFF Bd (ea Svc Test Sec) (1); AFF (5); AA Comd (2); OS Maj Comd (5); Base Comd (5); MDW (2); Log Comd (5); A (5); CHQ (2); FT (2); Sch (5) except 11 (25); Gen Dep (2); Dep 11 (20) except Sig Sec, Gen Dep (10); Tng Div (2); POE (2), OSD (2); Lab 11 (5); Mil Dist (1); Field Maint Shops 11 (3); Two (2) copies to each of the following T/O & E's: 5–226A; 6–200A; 6–226A; 6–227A; 6–229A; 6–236A; 6–237A; 6–416A; 6–447A; 7–11; 7–31; 7–32A; 7–34A; 7–36A; 9–37; 11–7; 11–16; 11–57; 11–107; 11–127; 11–128; 11–500A KA, KB, KC, RA–RR; 11–557A; 11–587; 11–592; 11–597; 17–32A; 17–36; 17–37; 17–116; 17–117; 17–125; 19–97A; 44–276A; 44–277A; 57–57.

NG: Same as Active Army except one copy to each unit.

Army Reserve: None.

For explanation of distribution formula, see SR 310–90–1.

☆ U.S. GOVERNMENT PRINTING OFFICE : 1959 O - 514768

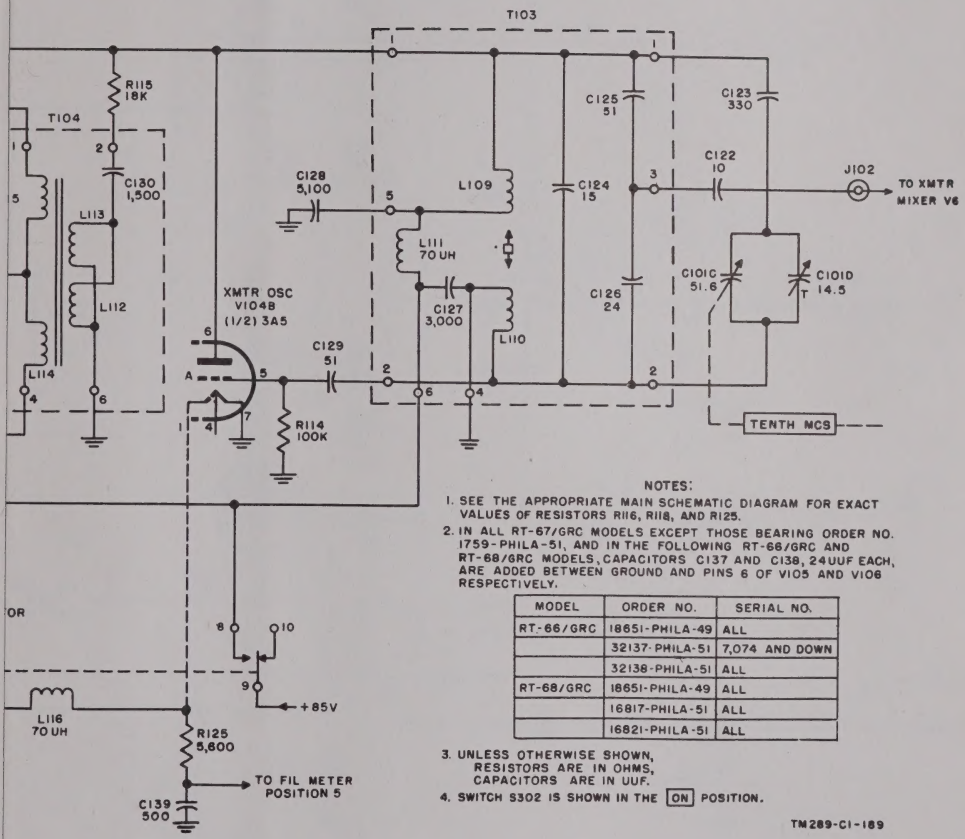

NOTES:

1. SEE THE APPROPRIATE MAIN SCHEMATIC DIAGRAM FOR EXACT VALUES OF RESISTORS R116, R118, AND R125.
2. IN ALL RT-67/GRC MODELS EXCEPT THOSE BEARING ORDER NO. 1759-PHILA-51, AND IN THE FOLLOWING RT-66/GRC AND RT-68/GRC MODELS, CAPACITORS C137 AND C138, 24 UUF EACH, ARE ADDED BETWEEN GROUND AND PINS 6 OF V105 AND V106 RESPECTIVELY.

MODEL	ORDER NO.	SERIAL NO.
RT-66/GRC	18651-PHILA-49	ALL
	32137-PHILA-51	7,074 AND DOWN
	32138-PHILA-51	ALL
RT-68/GRC	18651-PHILA-49	ALL
	16817-PHILA-51	ALL
	16821-PHILA-51	ALL

3. UNLESS OTHERWISE SHOWN, RESISTORS ARE IN OHMS, CAPACITORS ARE IN UUF.
4. SWITCH S302 IS SHOWN IN THE [ON] POSITION.

TM289-C1-189

one circuit, modulator and transmitter
onal diagram.

[AG 413.44 (3 Nov 53)]

BY ORDER OF THE SECRETARIES OF THE ARMY AND THE AIR FORCE:

M. B. RIDGWAY,
General, United States Army,
Chief of Staff.

OFFICIAL:
WM. E. BERGIN,
Major General, United States Army,
The Adjutant General.

N. F. TWINING,
Chief of Staff, United States Air Force.

OFFICIAL:
K. E. THIEBAUD,
Colonel, United States Air Force,
Air Adjutant General.

DISTRIBUTION:

Active Army:

Tech Svc (1); Tech Svc Bd (1); AFF Bd (ea Svc Test Sec) (1); AFF (5); AA Comd (2); OS Maj Comd (5); Base Comd (5); MDW (2); Log Comd (5); A (5); CHQ (2); FT (2); Sch (5) except 11 (25); Gen Dep (2); Dep 11 (20) except Sig Sec, Gen Dep (10); Tng Div (2); POE (2), OSD (2); Lab 11 (5); Mil Dist (1); Field Maint Shops 11 (3); Two (2) copies to each of the following T/O & E's: 5–226A; 6–200A; 6–226A; 6–227A; 6–229A; 6–236A; 6–237A; 6–416A; 6–447A; 7–11; 7–31; 7–32A; 7–34A; 7–36A; 9–37; 11–7; 11–16; 11–57; 11–107; 11–127; 11–128; 11–500A KA, KB, KC, RA–RR; 11–557A; 11–587; 11–592; 11–597; 17–32A; 17–36; 17–37; 17–116; 17–117; 17–125; 19–97A; 44–276A; 44–277A; 57–57.

NG: Same as Active Army except one copy to each unit.

Army Reserve: None.

For explanation of distribution formula, see SR 310–90–1.

☆ U.S. GOVERNMENT PRINTING OFFICE : 1959 O - 514768

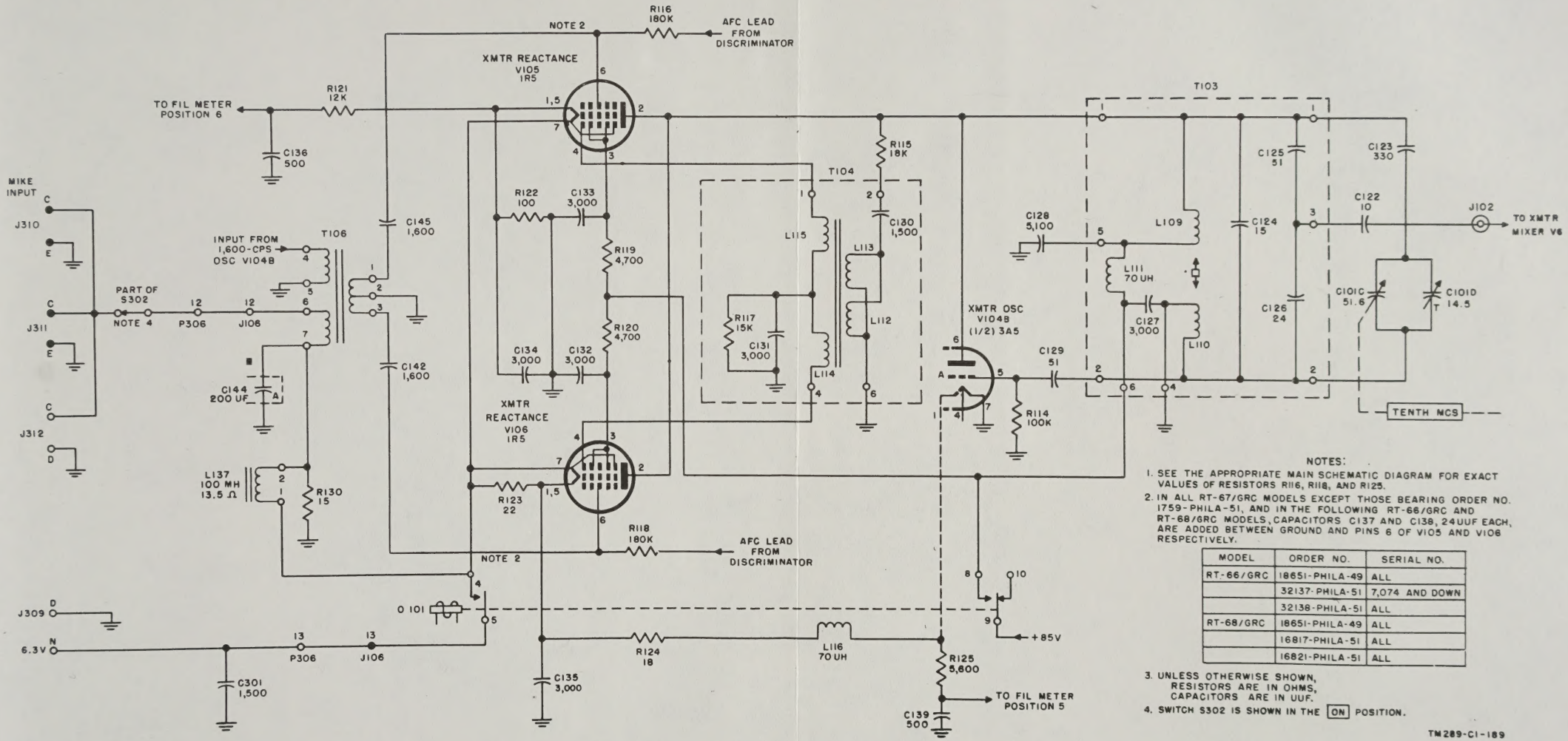

NOTES:

1. SEE THE APPROPRIATE MAIN SCHEMATIC DIAGRAM FOR EXACT VALUES OF RESISTORS R116, R118, AND R125.
2. IN ALL RT-67/GRC MODELS EXCEPT THOSE BEARING ORDER NO. 1759-PHILA-51, AND IN THE FOLLOWING RT-66/GRC AND RT-68/GRC MODELS, CAPACITORS C137 AND C138, 24 UUF EACH, ARE ADDED BETWEEN GROUND AND PINS 6 OF V105 AND V106 RESPECTIVELY.

MODEL	ORDER NO.	SERIAL NO.
RT-66/GRC	18651-PHILA-49	ALL
	32137-PHILA-51	7,074 AND DOWN
	32138-PHILA-51	ALL
RT-68/GRC	18651-PHILA-49	ALL
	16817-PHILA-51	ALL
	16821-PHILA-51	ALL

3. UNLESS OTHERWISE SHOWN, RESISTORS ARE IN OHMS, CAPACITORS ARE IN UUF.
4. SWITCH S302 IS SHOWN IN THE [ON] POSITION.

TM289-C1-189

Figure 13.—Receiver-transmitter microphone circuit, modulator and transmitter oscillator, functional diagram.

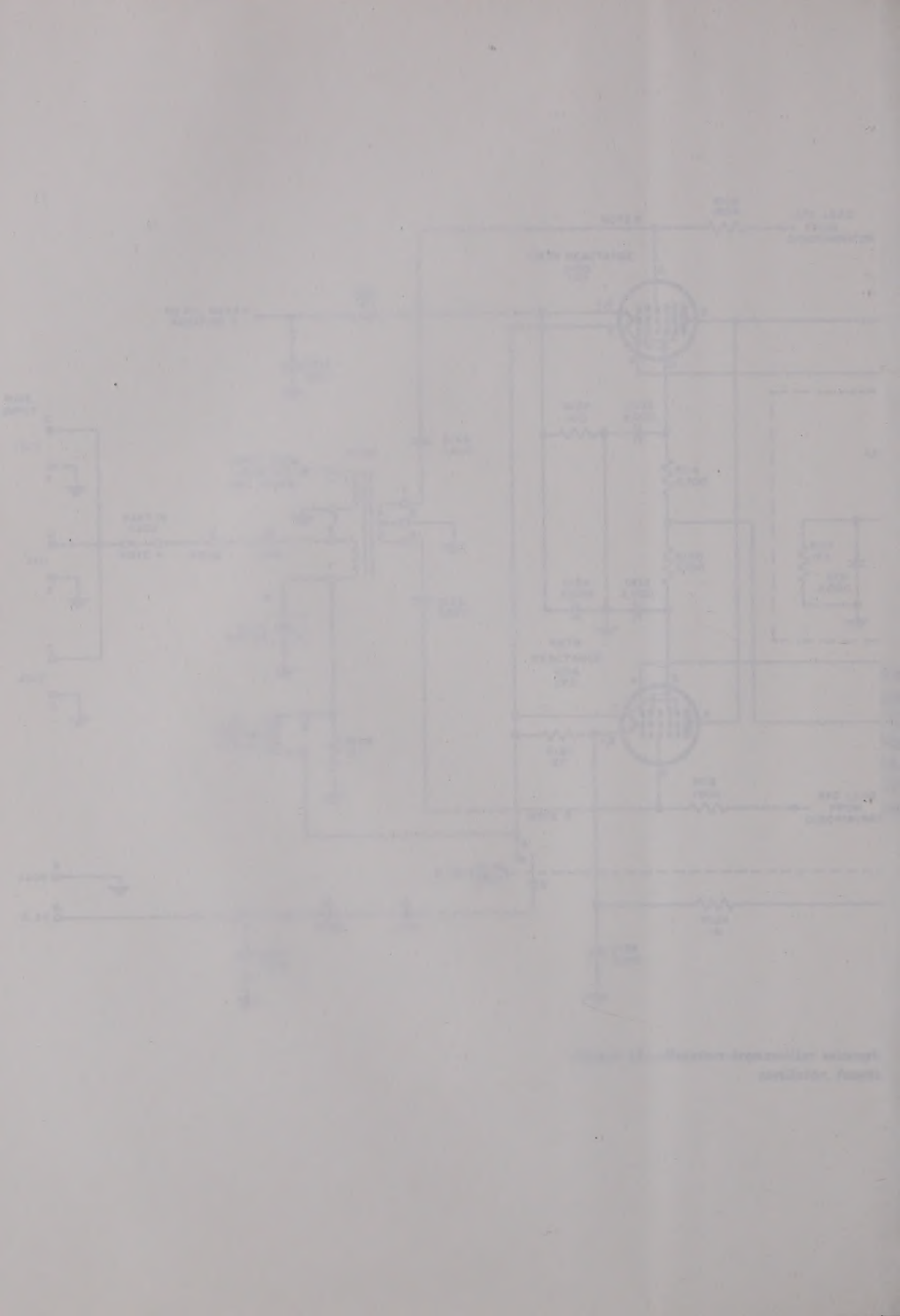

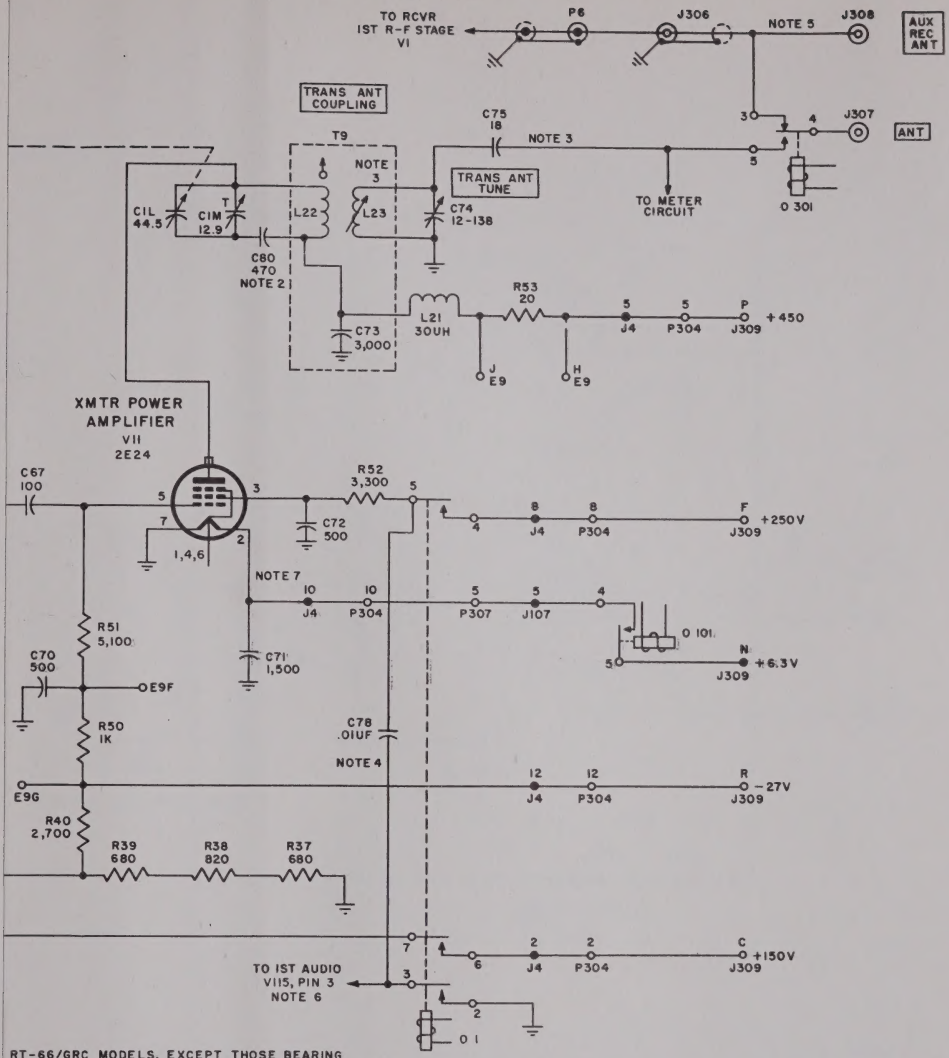

RT-66/GRC MODELS, EXCEPT THOSE BEARING
NO. 1759-PHILA-51, AND IN THE FOLLOWING RT-67/GRC
S, THE LABEL, TO V115, PIN 3, IST AUDIO, IS CHANGED TO READ:
)ELCH DIODE, V103, OUTPUT CIRCUIT.

ORDER NO.	SERIAL NO.
16831-PHILA-51	ALL
18651-PHILA-49	ALL
32111-PHILA-51	1-13,671

RT-66/GRC MODELS, EXCEPT THOSE BEARING ORDER NO. 1759-PHILA-51
137-PHILA-51, SERIAL NO. 6839 AND DOWN, COIL L20, 8.1UH, IS ADDED IN
WITH THE WIRE CONNECTED TO THE FILAMENT, PIN 2 OF V11.

S OTHERWISE SHOWN,
ISTORS ARE IN OHMS,
ACITORS ARE IN UUF.

TM289-C1-194

cer amplifier, and antenna circuits, functional
diagram

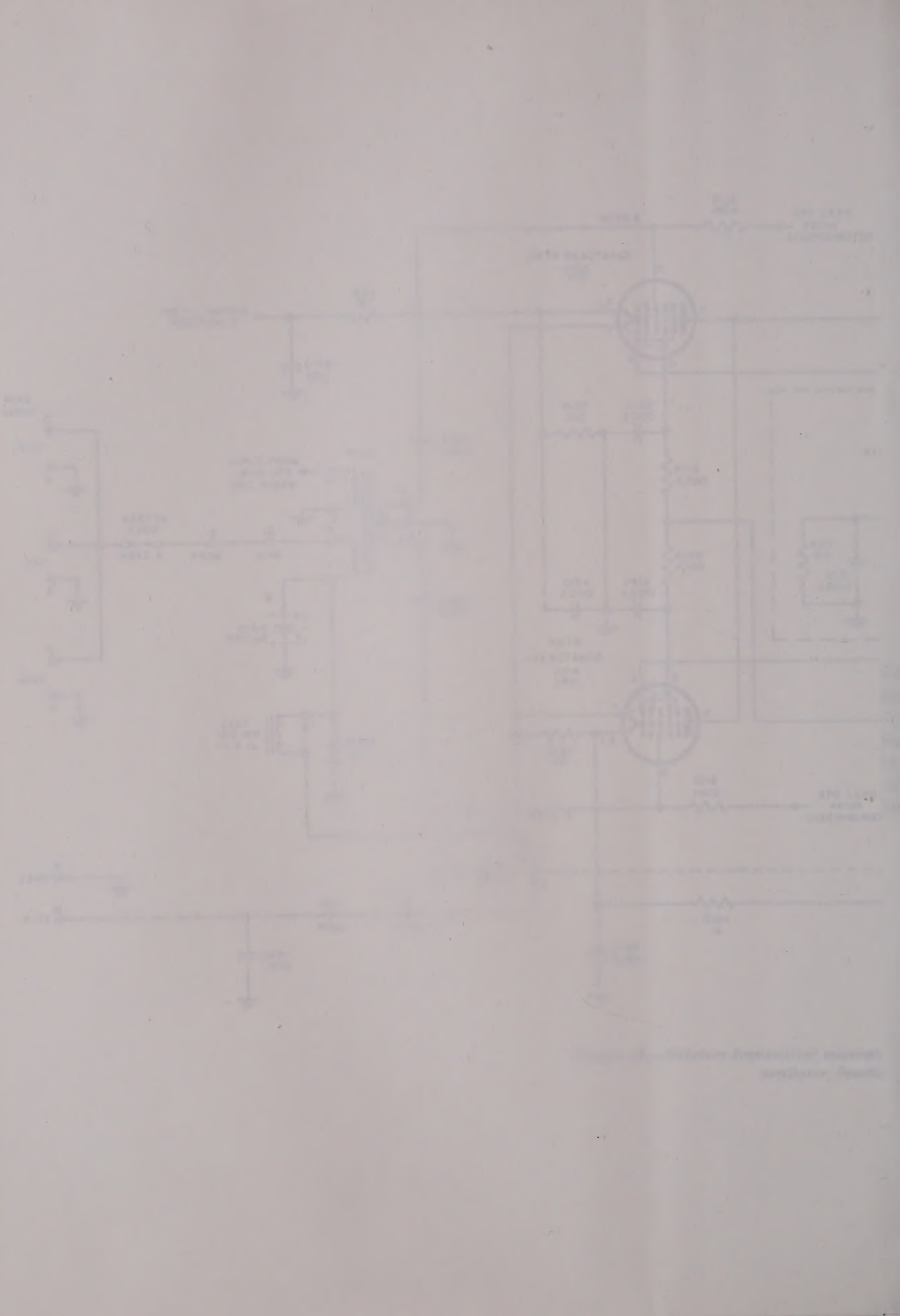

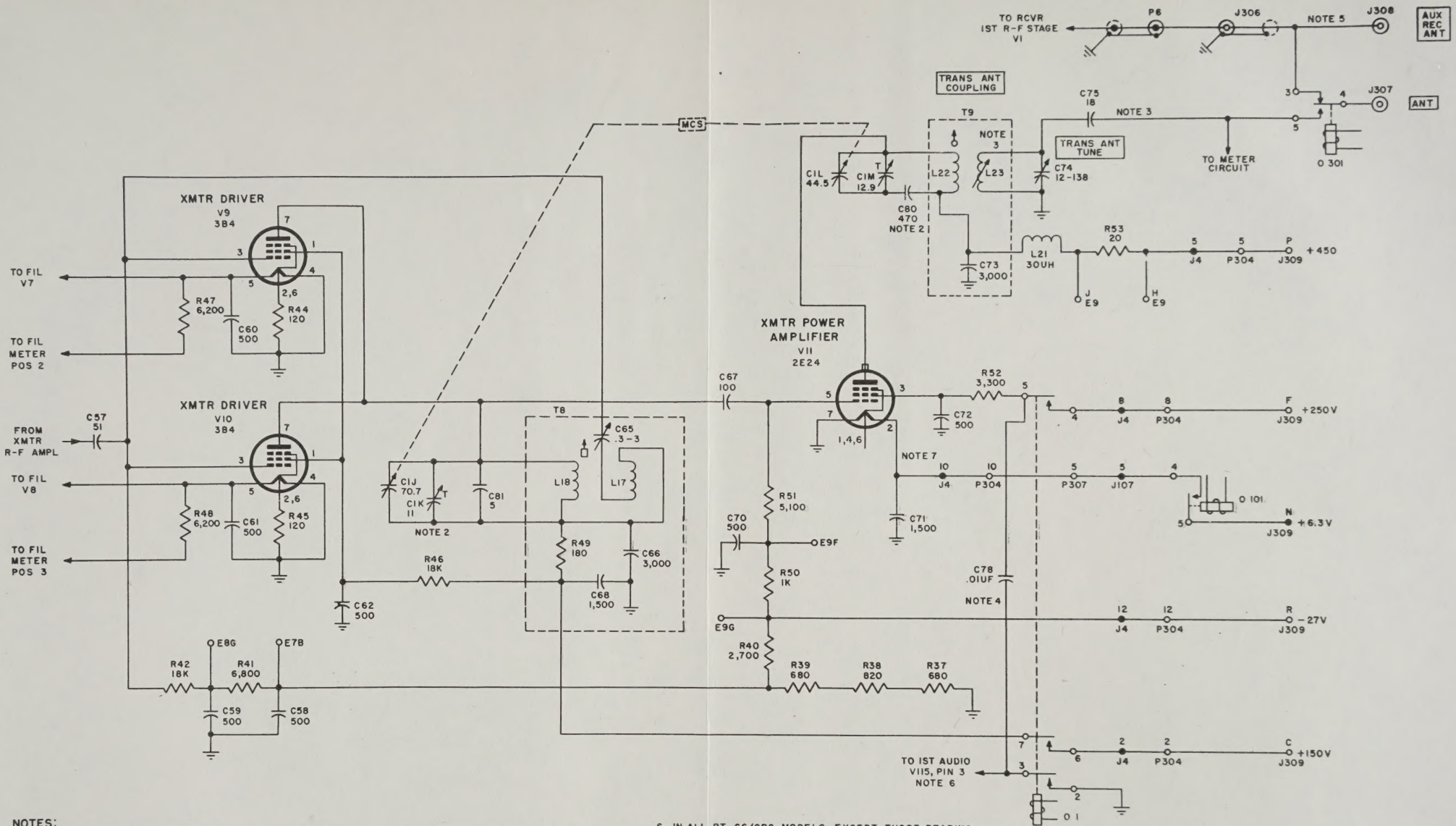

NOTES:

1. SEE THE APPROPRIATE MAIN SCHEMATIC DIAGRAMS FOR EXACT VALUES OF RESISTORS R39, R40, R46, R47, R48, R51, AND R52, AND CAPACITORS C58, C59, C60, C61, C62, C67, C70, C72, C75, AND C80.
2. IN ALL RT-66/GRC MODELS EXCEPT EARLY MODELS BEARING ORDER NO. 18651-PHILA-49, AND IN ALL RT-67/GRC MODELS, C79, 5 UUF, IS ADDED ACROSS COIL L22. IN ALL RT-66/GRC AND RT-67/GRC MODELS, CAPACITOR C80 IS REPLACED WITH A WIRE STRAP, AND CAPACITOR C81 IS NOT USED.
3. IN ALL RT-66/GRC MODELS, EXCEPT EARLY MODELS BEARING ORDER NO. 18651-PHILA-49, COIL L24 IS USED IN SERIES (INSIDE CAN) WITH UPPER END OF COIL L23. IN ALL RT-66/GRC MODELS CAPACITOR C75 IS REPLACED WITH A WIRE STRAP.
4. IN EARLY RT-66/GRC MODELS BEARING ORDER NO. 18651-PHILA-49, CAPACITOR C78 IS NOT USED.
5. IN THE FOLLOWING RT-67/GRC MODELS, CAPACITOR C306, 100 UUF, IS ADDED BETWEEN GROUND AND THE WIRE JOINING J306 TO J308.

ORDER NO.	SERIAL NO.
16831-PHILA-51	3995 AND UP
18651-PHILA-49	LATE MODELS
32111-PHILA-51	SOME MODELS

6. IN ALL RT-66/GRC MODELS, EXCEPT THOSE BEARING ORDER NO. 1759-PHILA-51, AND IN THE FOLLOWING RT-67/GRC MODELS, THE LABEL, TO V115, PIN 3, 1ST AUDIO, IS CHANGED TO READ: TO SQUELCH DIODE, V103, OUTPUT CIRCUIT.

ORDER NO.	SERIAL NO.
16831-PHILA-51	ALL
18651-PHILA-49	ALL
32111-PHILA-51	1-13,671

7. IN ALL RT-66/GRC MODELS, EXCEPT THOSE BEARING ORDER NO. 1759-PHILA-51 AND 32137-PHILA-51, SERIAL NO. 6839 AND DOWN, COIL L20, 8.1 UH, IS ADDED IN SERIES WITH THE WIRE CONNECTED TO THE FILAMENT, PIN 2 OF V11.
8. UNLESS OTHERWISE SHOWN, RESISTORS ARE IN OHMS, CAPACITORS ARE IN UUF.

TM289-CI-194

Figure 19.—Transmitter driver, power amplifier, and antenna circuits, functional diagram

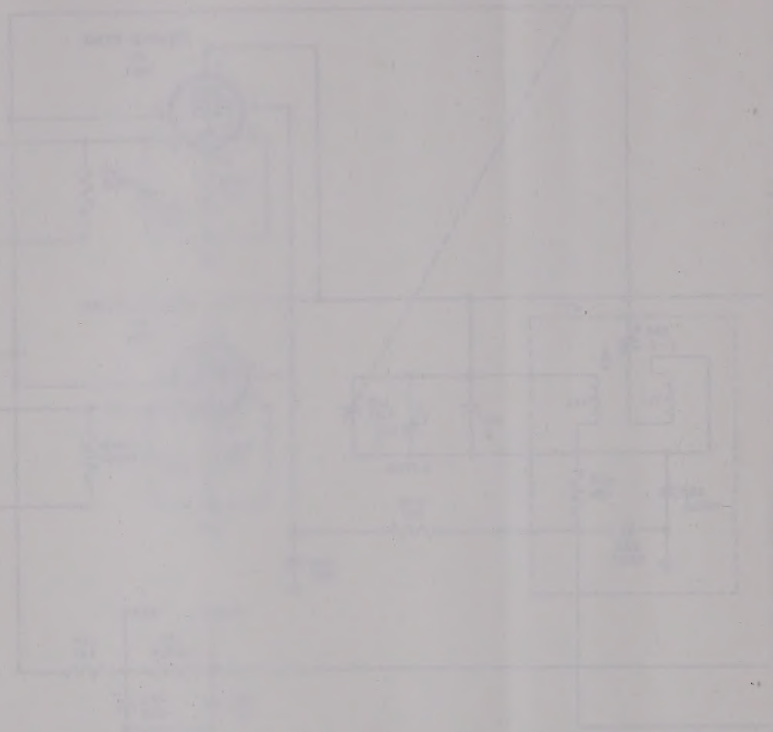

NOTES:

1. SEE THE APPROPRIATE MAIN SCHEMATIC DIAGRAM FOR EXACT VALUES OF RESISTORS R55 AND R111.
2. IN THE FOLLOWING MODELS, CONTROL VOLTAGE FOR THE SQUELCH OSCILLATOR IS OBTAINED ONLY FROM THE GRID, PIN 6 OF FIRST LIMITER V111, THROUGH RESISTOR R111. THE CIRCUIT CONNECTING THE GRID, PIN 6 OF SECOND LIMITER V112, TO THE SQUELCH OSCILLATOR THROUGH RESISTOR R184, IS NOT USED.

MODEL	ORDER NO.	SERIAL NO.
RT-66/GRC	18651-PHILA-49	LATE MODELS
	32138-PHILA-51	1-2715
RT-67/GRC	16831-PHILA-51	ALL
	18651-PHILA-49	ALL
	32111-PHILA-51	1-7249
RT-68/GRC	16817-PHILA-51	9675 AND DOWN
	16821-PHILA-51	16667 AND DOWN
	18651-PHILA-49	1882 AND DOWN

IN THE FOLLOWING RT-66/GRC MODELS, CONTROL VOLTAGE FOR THE SQUELCH OSCILLATOR IS OBTAINED FROM THE GRID, PIN 6, OF FIRST FIXED I.F., V110 THROUGH RESISTOR R182, 470K, AND FROM THE GRID, PIN 6, OF FIRST LIMITER, V111, THROUGH RESISTOR R111, 2.2 MEG. THE CIRCUIT CONNECTING THE GRID, PIN 6, OF SECOND LIMITER V112 TO THE SQUELCH OSCILLATOR THROUGH RESISTOR R184 IS NOT USED. RESISTOR R183, 39K, IS ADDED BETWEEN THE SCREEN GRID OF V110 (PIN 3) AND GROUND.

ORDER NO.	SERIAL NO.
21434-PHILA-50	ALL
32137-PHILA-51	ALL
32138-PHILA-51	2716 AND UP

IN EARLY RT-66/GRC MODELS BEARING ORDER NO 18651-PHILA-49, CONTROL VOLTAGE FOR THE SQUELCH OSCILLATOR IS OBTAINED ONLY FROM THE GRID, PIN 6 OF SECOND LIMITER V112 THROUGH RESISTOR R111. THE CONNECTION OF R111 IS SHIFTED FROM THE GRID, PIN 6 OF V111 TO THE GRID, PIN 6 OF V112. RESISTOR R184, AND ITS CONNECTION TO THE GRID, PIN 6 OF V112, ARE DELETED.

3. IN ALL RT-66/GRC MODELS, THE CIRCUIT FROM THE GRID, PIN 1 OF R-F AMPLIFIER V1 IS CONNECTED TO THE SQUELCH OUTPUT CIRCUIT INSTEAD OF THE GRID, PIN 6, OF FIRST LIMITER V111.
4. IN EARLY RT-66/GRC MODELS BEARING ORDER NO.18651-PHILA-49, V110 IS A 1U4 INSTEAD OF A 1L4 TUBE
5. UNLESS OTHERWISE SHOWN; RESISTORS ARE IN OHMS, CAPACITORS ARE IN UUF.

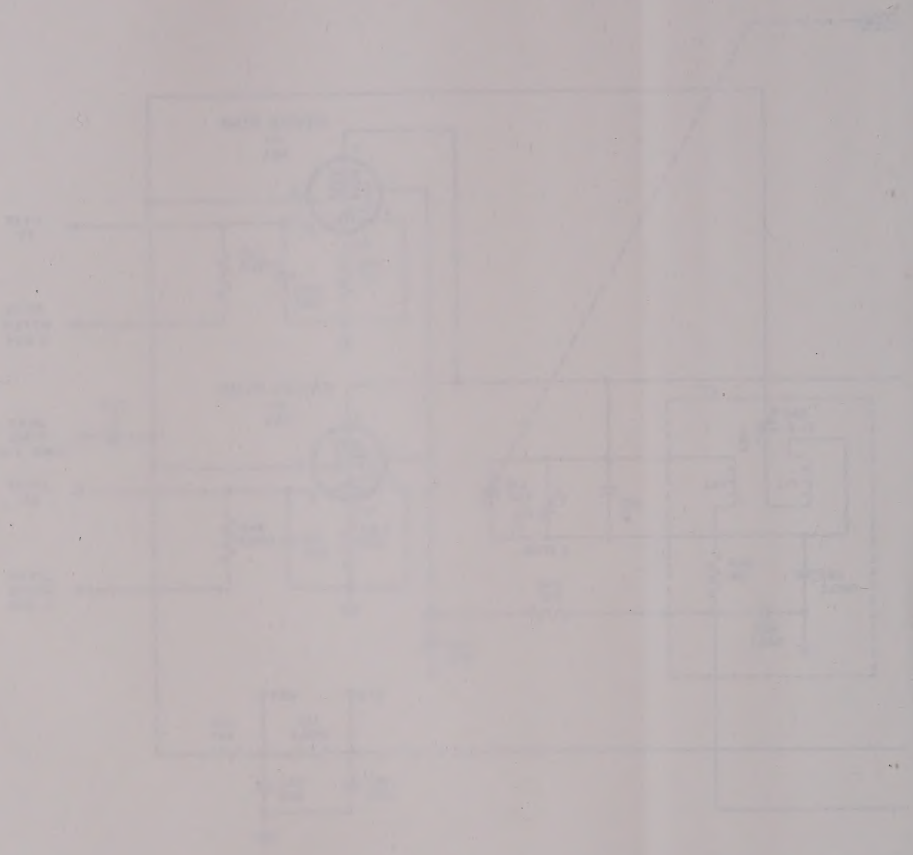

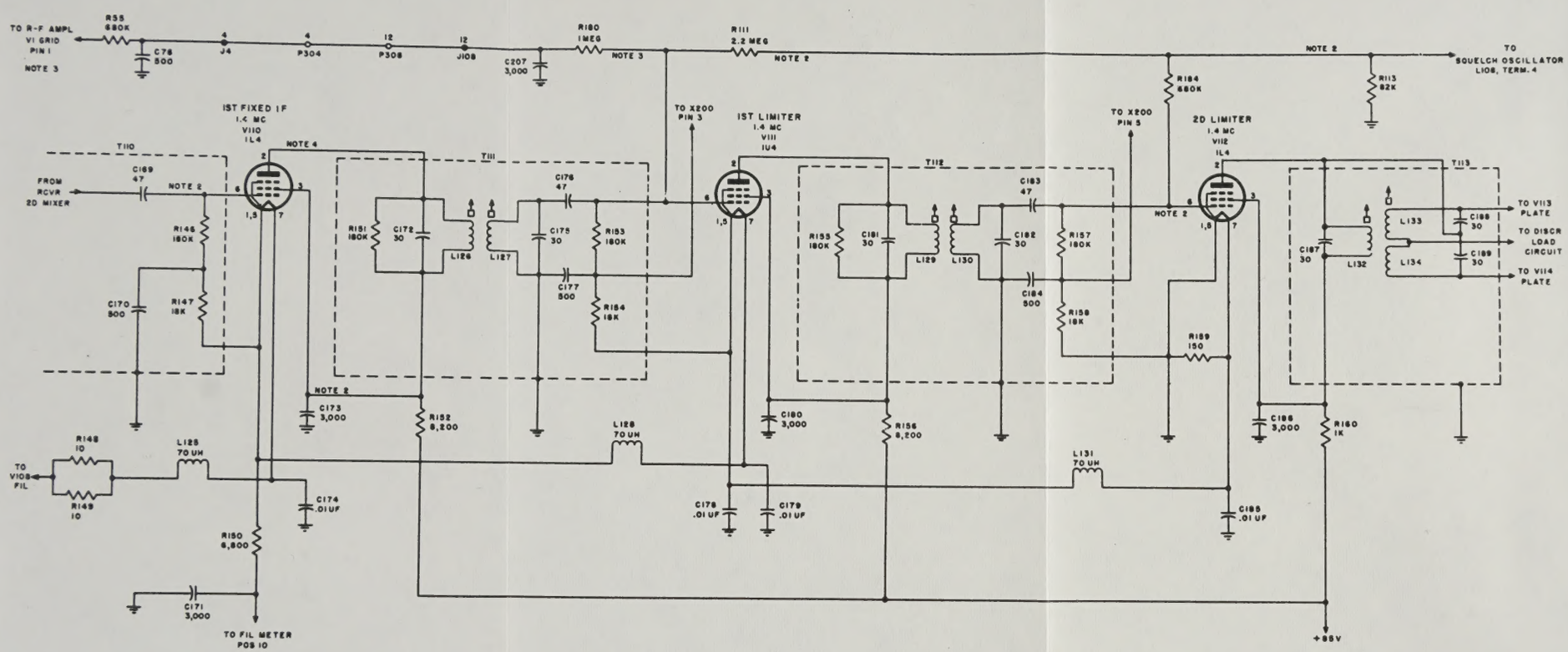

Figure 27.—Fixed i–f amplifier and limiter circuits, functional diagram

NOTES:

1. SEE THE APPROPRIATE MAIN SCHEMATIC DIAGRAM FOR EXACT VALUES OF RESISTORS R55 AND R111.
2. IN THE FOLLOWING MODELS, CONTROL VOLTAGE FOR THE SQUELCH OSCILLATOR IS OBTAINED ONLY FROM THE GRID, PIN 6 OF FIRST LIMITER V111, THROUGH RESISTOR R111. THE CIRCUIT CONNECTING THE GRID, PIN 6 OF SECOND LIMITER V112, TO THE SQUELCH OSCILLATOR THROUGH RESISTOR R184, IS NOT USED.

MODEL	ORDER NO.	SERIAL NO.
RT-66/GRC	18651-PHILA-49	LATE MODELS
	32136-PHILA-51	1-2715
RT-67/GRC	18831-PHILA-51	ALL
	18651-PHILA-49	ALL
	32111-PHILA-51	1-7249
RT-68/GRC	18817-PHILA-51	9675 AND DOWN
	18821-PHILA-51	16667 AND DOWN
	18651-PHILA-49	1882 AND DOWN

IN THE FOLLOWING RT-66/GRC MODELS, CONTROL VOLTAGE FOR THE SQUELCH OSCILLATOR IS OBTAINED FROM THE GRID, PIN 6, OF FIRST FIXED I.F., V110 THROUGH RESISTOR R182, 470K, AND FROM THE GRID, PIN 8, OF FIRST LIMITER, V111, THROUGH RESISTOR R111, 2.2 MEG. THE CIRCUIT CONNECTING THE GRID, PIN 6, OF SECOND LIMITER V112 TO THE SQUELCH OSCILLATOR THROUGH RESISTOR R184 IS NOT USED. RESISTOR R183, 39K, IS ADDED BETWEEN THE SCREEN GRID OF V110 (PIN 3) AND GROUND.

ORDER NO.	SERIAL NO.
21434-PHILA-50	ALL
32137-PHILA-51	ALL
32138-PHILA-51	2716 AND UP

IN EARLY RT-66/GRC MODELS BEARING ORDER NO 18651-PHILA-49, CONTROL VOLTAGE FOR THE SQUELCH OSCILLATOR IS OBTAINED ONLY FROM THE GRID, PIN 6 OF SECOND LIMITER V112 THROUGH RESISTOR R111. THE CONNECTION OF R111 IS SHIFTED FROM THE GRID, PIN 6 OF V111 TO THE GRID, PIN 6 OF V112. RESISTOR R184, AND ITS CONNECTION TO THE GRID, PIN 6 OF V112, ARE DELETED.

3. IN ALL RT-66/GRC MODELS, THE CIRCUIT FROM THE GRID, PIN 1 OF R-F AMPLIFIER V1 IS CONNECTED TO THE SQUELCH OUTPUT CIRCUIT INSTEAD OF THE GRID, PIN 6, OF FIRST LIMITER V111.
4. IN EARLY RT-68/GRC MODELS BEARING ORDER NO.18651-PHILA-49, V110 IS A 1U4 INSTEAD OF A 1L4 TUBE.
5. UNLESS OTHERWISE SHOWN; RESISTORS ARE IN OHMS, CAPACITORS ARE IN UUF.

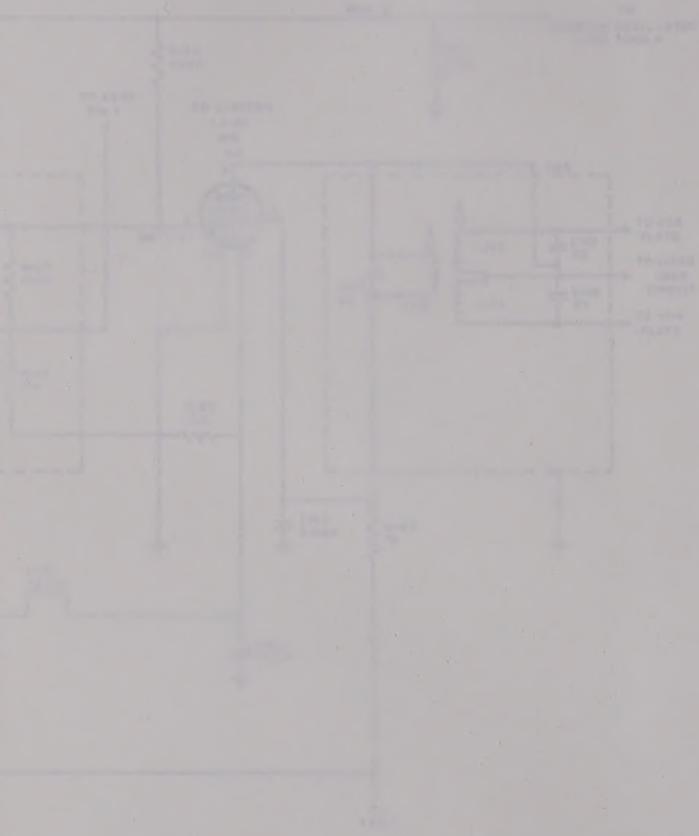

NOTES:

1. SEE THE APPROPRIATE MAIN SCHEMATIC DIAGRAM FOR EXACT VALUES OF RESISTORS R47, R48, R125, R142, R143, AND R147 AND CAPACITORS C41, C42, C46, C49, C51, C52, C60, C61 AND C149.
2. IN ALL RT-66/GRC AND RT-67/GRC MODELS EXCEPT THOSE BEARING ORDER NO. 1759-PHILA-51, CAPACITOR C64, 1,500 UUF IS ADDED BETWEEN THE BOTTOM OF RESISTOR R47 AND GROUND; CAPACITOR C63, 1,500 UUF IS ADDED BETWEEN THE BOTTOM OF RESISTOR R48 AND GROUND.
3. IN ALL RT-66/GRC AND RT-67/GRC MODELS, CAPACITOR C50, 1,500 UUF IS ADDED BETWEEN PIN 7 OF V8 AND GROUND.
4. IN EARLY RT-66/GRC MODELS BEARING ORDER NO. 18651-PHILA-49, THE FILAMENTS AND COMPONENTS OF V103 AND V107 ARE REARRANGED AS FOLLOWS:

   V103, 1S5, AND V107, 1L4, ARE INTERCHANGED
   PIN 1 OF V103 IS CONNECTED TO GROUND
   PIN 1,5 OF V107 IS CONNECTED TO PIN 7 OF V103 THROUGH COIL L107
   PIN 7 OF V107 IS CONNECTED TO PIN 1 OF V102
   CAPACITOR C116 IS CONNECTED BETWEEN PIN 7 OF V103 AND GROUND
   CAPACITOR C149 IS CONNECTED BETWEEN PIN 7 OF V107 AND GROUND.
5. IN THE FOLLOWING MODELS, COILS L14 AND L15, 5.3 UH EACH, ARE USED IN PLACE OF RESISTORS R56 AND R57 RESPECTIVELY

MODEL	ORDER NO.	SERIAL NO.
RT-66/GRC	18651-PHILA-49	ALL
	32137-PHILA-51	ALL
	32138-PHILA-51	ALL
RT-67/GRC	16831-PHILA-51	ALL
	18651-PHILA-49	ALL

6. IN THE FOLLOWING RT-66/GRC MODELS, COIL L20, 8.1UH IS ADDED IN SERIES WITH THE WIRE CONNECTED TO THE JUNCTION OF CAPACITOR C71 AND PIN 2 OF TUBE V11.

ORDER NO.	SERIAL NO.
18651-PHILA-49	ALL
21434-PHILA-50	ALL
32137-PHILA-51	1-6,839
32138-PHILA-51	ALL

7. IN EARLY RT-66/GRC MODELS BEARING ORDER NO. 18651-PHILA-49, V110 IS A 1U4 TUBE.
8. UNLESS OTHERWISE SHOWN,
   RESISTORS ARE IN OHMS,
   CAPACITORS ARE IN UUF.

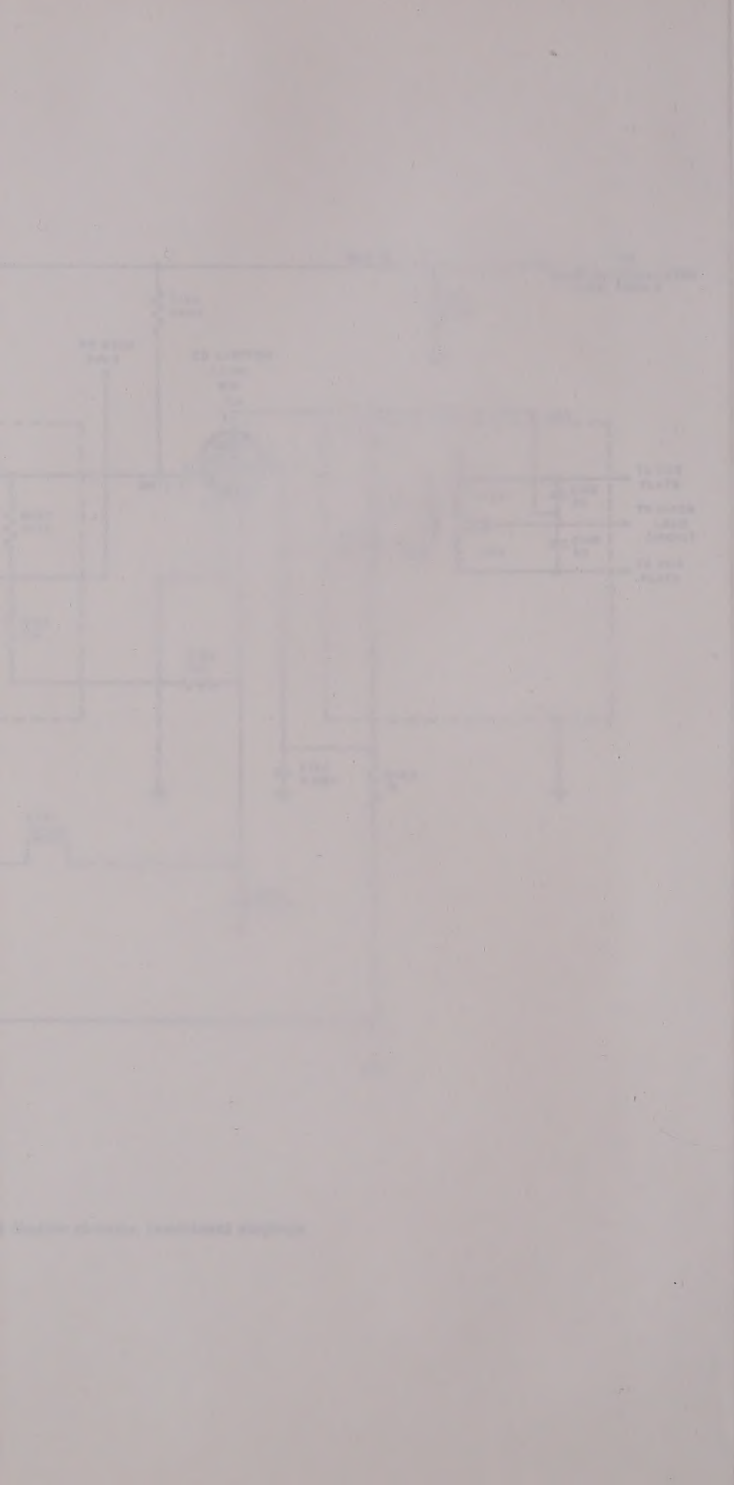

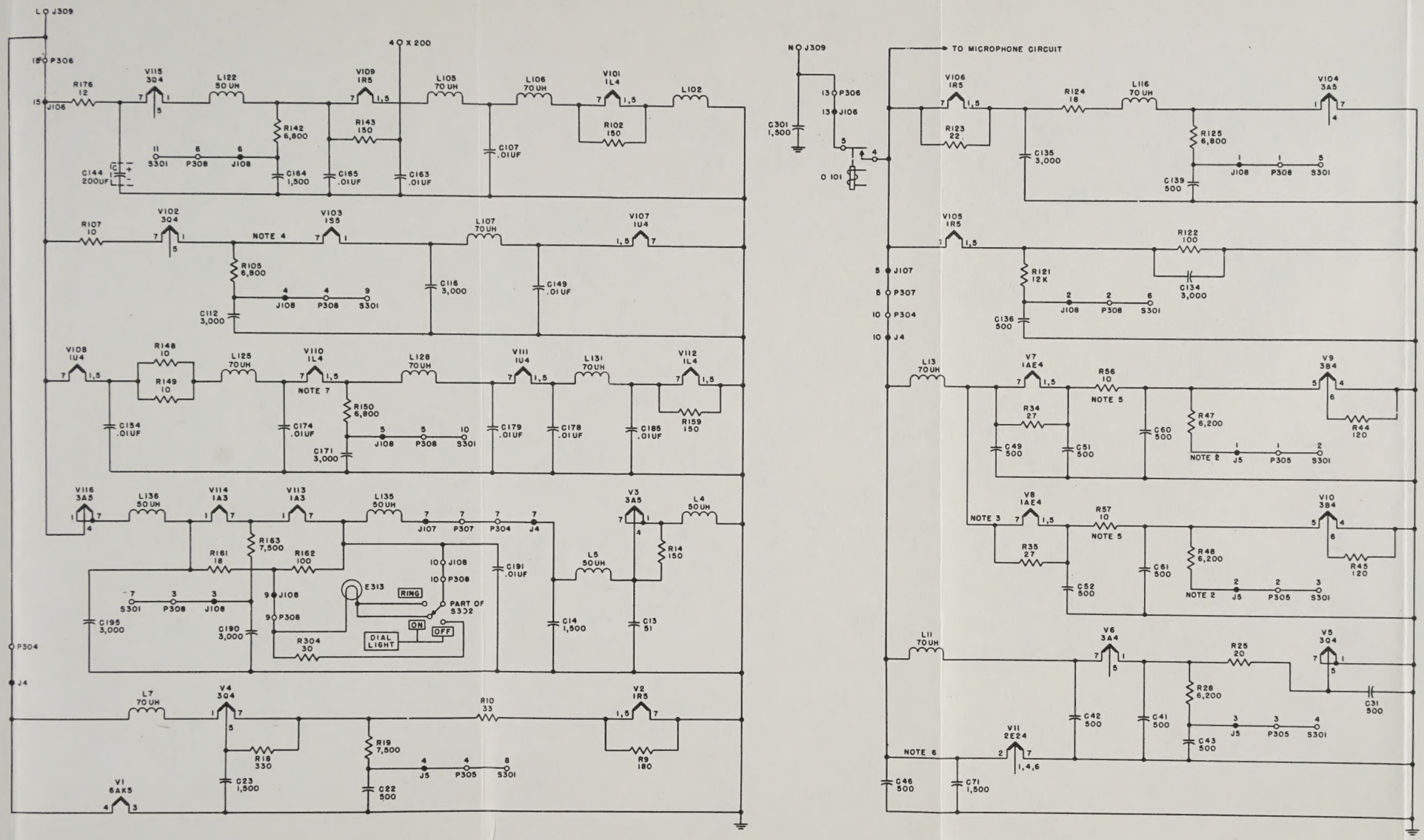

Figure 37.—Filament circuits, functional diagram.

NOTES:

1. SEE THE APPROPRIATE MAIN SCHEMATIC DIAGRAM FOR EXACT VALUES OF RESISTORS R47, R48, R125, R142, R143, AND R147 AND CAPACITORS C41, C42, C46, C49, C51, C52, C60, C61 AND C149.
2. IN ALL RT-66/GRC AND RT-67/GRC MODELS EXCEPT THOSE BEARING ORDER NO. 1759-PHILA-51, CAPACITOR C64, 1500 UUF IS ADDED BETWEEN THE BOTTOM OF RESISTOR R47 AND GROUND; CAPACITOR C63, 1500 UUF IS ADDED BETWEEN THE BOTTOM OF RESISTOR R48 AND GROUND.
3. IN ALL RT-66/GRC AND RT-67/GRC MODELS, CAPACITOR C50, 1500 UUF IS ADDED BETWEEN PIN 7 OF V8 AND GROUND.
4. IN EARLY RT-66/GRC MODELS BEARING ORDER NO. 18651-PHILA-49, THE FILAMENTS AND COMPONENTS OF V103 AND V107 ARE REARRANGED AS FOLLOWS:
   - V103, 1S5, AND V107, 1L4, ARE INTERCHANGED
   - PIN 1 OF V103 IS CONNECTED TO GROUND
   - PIN 1,5 OF V107 IS CONNECTED TO PIN 7 OF V103 THROUGH COIL L107
   - PIN 7 OF V107 IS CONNECTED TO PIN 1 OF V102
   - CAPACITOR C116 IS CONNECTED BETWEEN PIN 7 OF V103 AND GROUND
   - CAPACITOR C149 IS CONNECTED BETWEEN PIN 7 OF V107 AND GROUND.
5. IN THE FOLLOWING MODELS, COILS L14 AND L15, 5.3 UH EACH, ARE USED IN PLACE OF RESISTORS R56 AND R57 RESPECTIVELY

MODEL	ORDER NO.	SERIAL NO.
RT-66/GRC	18651-PHILA-49	ALL
	32137-PHILA-51	ALL
	32138-PHILA-51	ALL
RT-67/GRC	16831-PHILA-51	ALL
	18651-PHILA-49	ALL

6. IN THE FOLLOWING RT-66/GRC MODELS, COIL L20, 8.1UH IS ADDED IN SERIES WITH THE WIRE CONNECTED TO THE JUNCTION OF CAPACITOR C71 AND PIN 2 OF TUBE V11.

ORDER NO.	SERIAL NO.
18651-PHILA-49	ALL
21434-PHILA-50	ALL
32137-PHILA-51	1-6,839
32138-PHILA-51	ALL

7. IN EARLY RT-66/GRC MODELS BEARING ORDER NO. 18651-PHILA-49, V110 IS A 1U4 TUBE.
8. UNLESS OTHERWISE SHOWN, RESISTORS ARE IN OHMS, CAPACITORS ARE IN UUF.

TM 289-CI-211

NOTES:

1. SEE THE APPROPRIATE MAIN SCHEMATIC DIAGRAM FOR EXACT VALUES OF RESISTORS R29 AND R46.
2. IN ALL RT-66/GRC MODELS AND IN THE FOLLOWING RT-67/GRC AND RT-68/GRC MODELS, RESISTOR R310 IS NOT USED, AND RESISTOR R309 IS REPLACED WITH A WIRE STRAP.

MODEL	ORDER NO.	SERIAL NO.
RT-67/GRC	16831-PHILA-51	ALL
	18651-PHILA-49	ALL
	32111-PHILA-51	1-7249
RT-68/GRC	16817-PHILA-51	9675 AND DOWN
	18821-PHILA-51	16666 AND DOWN
	18651-PHILA-49	1-1882

3. IN ALL RT-66/GRC MODELS EXCEPT THOSE BEARING ORDER NO. 1759-PHILA-51 AND IN THE FOLLOWING RT-67/GRC MODELS, +85 VOLTS IS APPLIED TO THE SCREEN GRID CIRCUIT OF V2 THROUGH NORMALLY CLOSED CONTACTS 9-10 OF RELAY O-101, TERMINALS 1 OF J106 AND P306, AND TERMINALS 9 OF P304 AND J4, INSTEAD OF THROUGH TERMINALS 6 OF P304 AND J4.

ORDER NO.	SERIAL NO.
16831-PHILA-51	ALL
18651-PHILA-49	ALL
32111-PHILA-51	1-13671

4. IN ALL RT-66/GRC AND RT-67/GRC MODELS, AND IN RT-68/GRC MODELS BEARING ORDER NO. 18651-PHILA-49, DAMPING RESISTORS R20 AND R24 ARE ADDED IN SERIES WITH THE PLATES OF V4 AND V5 RESPECTIVELY. SEE APPROPRIATE MAIN SCHEMATIC FOR EXACT VALUES OF THE RESISTORS.
5. IN EARLY RT-66/GRC MODELS BEARING ORDER NO. 18 651-PHILA-49, RESISTOR R301, 120K, IS ADDED IN SERIES WITH THE WIRE CONNECTED TO THE TOP OF POTENTIOMETER R302, RESISTOR R129, 36K, IS ADDED IN SERIES WITH THE WIRE CONNECTING THE BOTTOM OF TRANSFORMER T105 TO TERMINAL 6 OF J106.
6. IN ALL RT-66/GRC MODELS, COIL L2, 30UH, IS SUBSTITUTED FOR COIL L3 IN THE D-C PLATE SUPPLY CIRCUIT OF RECEIVER R-F AMPLIFIER V1. COIL L3 IS USED IN THE PLATE TANK CIRCUIT ONLY.
7. EXT RELAY (OR JUMPER) CONNECTED BETWEEN J AND H OF J312 EXTENDS +85-VOLT SUPPLY TO V115. EXT RELAY ENERGIZED WHEN SQUELCH IS OFF.
8. UNLESS OTHERWISE SHOWN, RESISTORS ARE IN OHMS, CAPACITORS ARE IN UUF

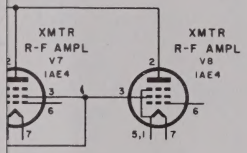

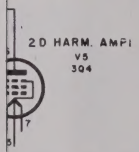

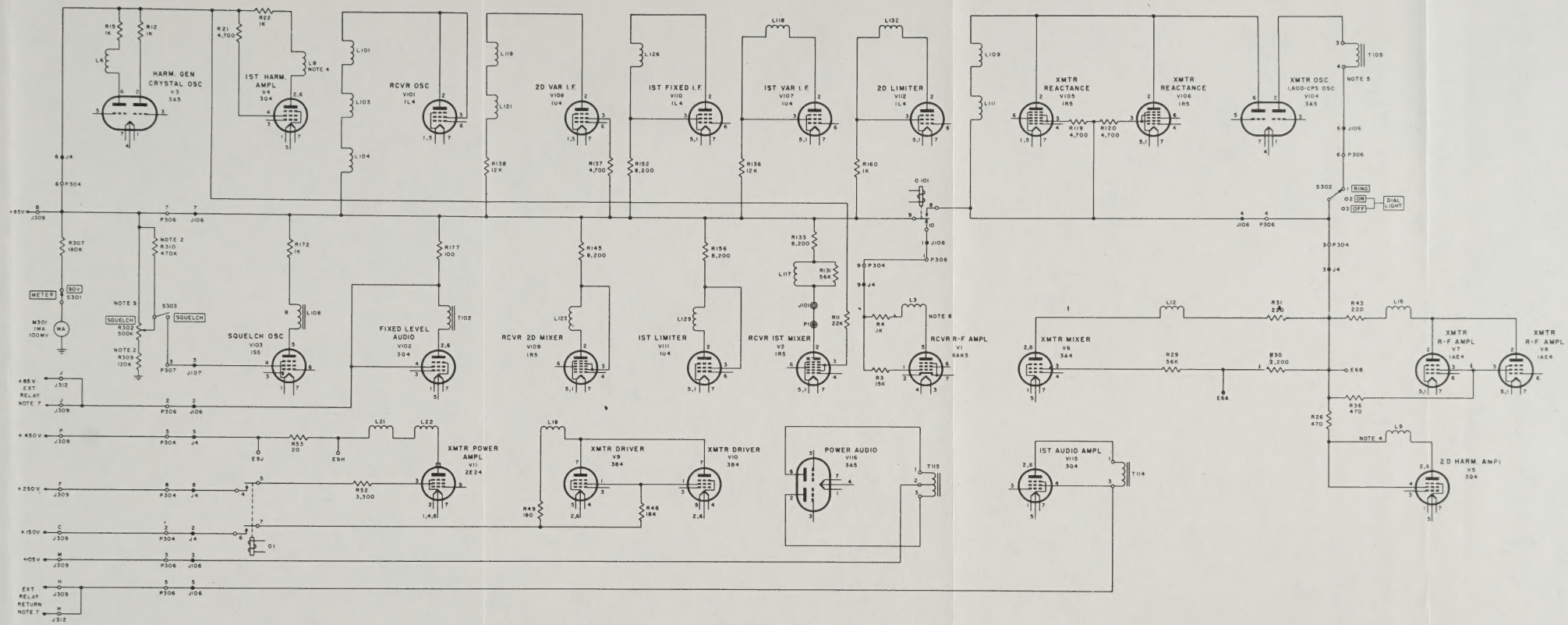

NOTES:

1. SEE THE APPROPRIATE MAIN SCHEMATIC DIAGRAM FOR EXACT VALUES OF RESISTORS R29 AND R46.
2. IN ALL RT-66/GRC MODELS AND IN THE FOLLOWING RT-67/GRC AND RT-68/GRC MODELS, RESISTOR R310 IS NOT USED, AND RESISTOR R309 IS REPLACED WITH A WIRE STRAP.

MODEL	ORDER NO.	SERIAL NO.
RT-67/GRC	16831-PHILA-51	ALL
	18651-PHILA-49	ALL
	32111-PHILA-51	1-7249
RT-68/GRC	16817-PHILA-51	9675 AND DOWN
	16821-PHILA-51	16666 AND DOWN
	18651-PHILA-49	1-1882

3. IN ALL RT-66/GRC MODELS EXCEPT THOSE BEARING ORDER NO. 1759-PHILA-51 AND IN THE FOLLOWING RT-67/GRC MODELS, +85 VOLTS IS APPLIED TO THE SCREEN GRID CIRCUIT OF V2 THROUGH NORMALLY CLOSED CONTACTS 9-10 OF RELAY O-101, TERMINALS 1 OF J106 AND P306, AND TERMINALS 5 OF P304 AND J4, INSTEAD OF THROUGH TERMINALS 6 OF P304 AND J4.

ORDER NO.	SERIAL NO.
16831-PHILA-51	ALL
18651-PHILA-49	ALL
32111-PHILA-51	1-13671

4. IN ALL RT-66/GRC AND RT-67/GRC MODELS, AND IN RT-68/GRC MODELS BEARING ORDER NO. 18651-PHILA-49, DAMPING RESISTORS R20 AND R24 ARE ADDED IN SERIES WITH THE PLATES OF V4 AND V5 RESPECTIVELY. SEE APPROPRIATE MAIN SCHEMATIC FOR EXACT VALUES OF THE RESISTORS.
5. IN EARLY RT-66/GRC MODELS BEARING ORDER NO. 18 651-PHILA-49, RESISTOR R301, 120K, IS ADDED IN SERIES WITH THE WIRE CONNECTED TO THE TOP OF POTENTIOMETER R302; RESISTOR R129, 36K, IS ADDED IN SERIES WITH THE WIRE CONNECTING THE BOTTOM OF TRANSFORMER T105 TO TERMINAL 6 OF J106.
6. IN ALL RT-66/GRC MODELS, COIL L2, 30UH, IS SUBSTITUTED FOR COIL L3 IN THE D-C PLATE SUPPLY CIRCUIT OF RECEIVER R-F AMPLIFIER V1. COIL L3 IS USED IN THE PLATE TANK CIRCUIT ONLY.
7. EXT RELAY (OR JUMPER) CONNECTED BETWEEN J AND H OF J312 EXTENDS +85-VOLT SUPPLY TO VII5. EXT RELAY ENERGIZED WHEN SQUELCH IS OFF.
8. UNLESS OTHERWISE SHOWN, RESISTORS ARE IN OHMS, CAPACITORS ARE IN UUF.

TM 289-C1-212

Figure 38.—Plate and screen supply circuits, functional diagram.

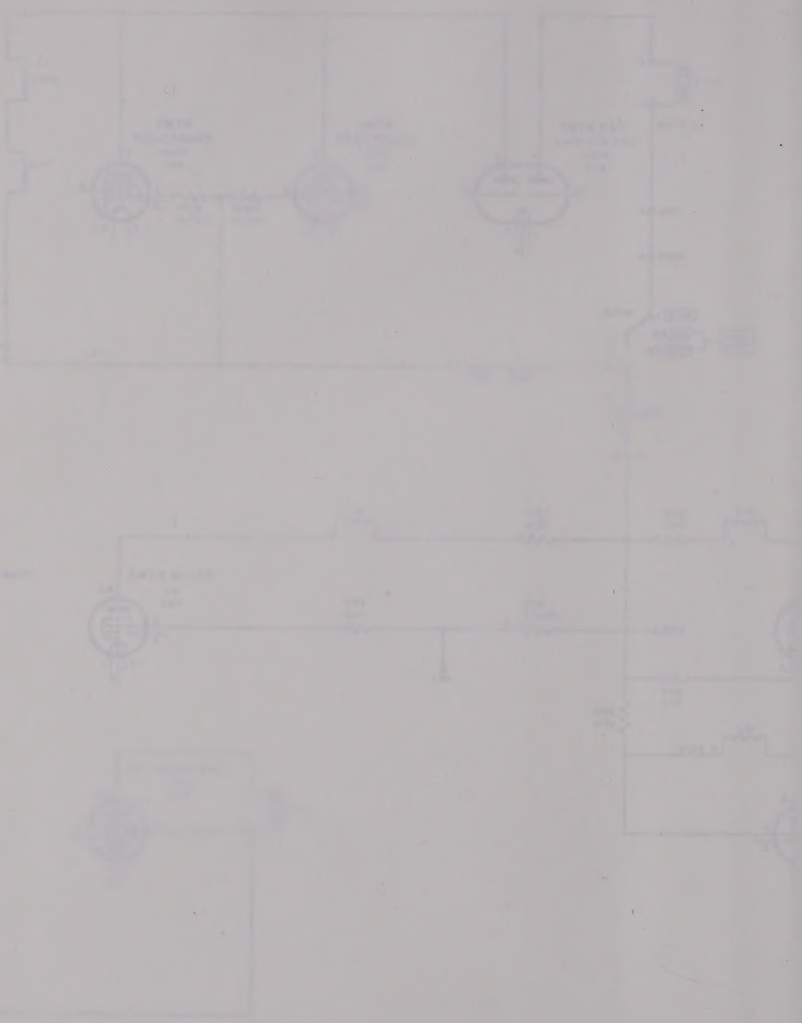

F

3.2V
22

.65V
200K

4.6V
24

CVR 2D MIXER
V109
1R5
X109

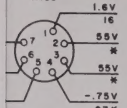

E

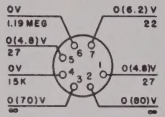

OSC AND
CPS OSC
04
A5
04

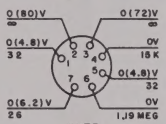

XMTR
REACTANCE
V105
1R5
X105

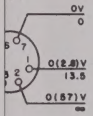

E IF

1.6V
17

1V
180K

0V
0

TEST CONDITIONS:

1. ALL READINGS OBTAINED WITH 20,000 OHMS-PER-VOLT METER.
2. VOLUME CONTROL IN EXTREME CLOCKWISE POSITION.
3. SQUELCH CONTROL IN EXTREME COUNTERCLOCKWISE POSITION (OFF).
4. FOR V104 VOLTAGE READINGS S302 IN RING POSITION; FOR ALL OTHER READINGS IN DIAL LIGHT OFF POSITION.
5. JUMPER BETWEEN H AND J OF J312 CONNECTED.
6. NUMBERS ABOVE REFERENCE LINES ARE VOLTAGE READINGS OBTAINED WITH NO SIGNAL APPLIED.
7. WHERE TWO VOLTAGES ARE SHOWN THE VOLTAGE READING IN PARENTHESES IS OBTAINED WITH MICROPHONE PUSH-TO-TALK SWITCH CLOSED (I.E. TERMINAL K OF J312 GROUNDED); WHERE ONLY ONE READING IS GIVEN, IT APPLIES TO EITHER CONDITION.
8. NUMBERS BELOW REFERENCE LINES ARE RESISTANCE READINGS OBTAINED WITH ALL TUBES INSTALLED AND ALL PLUGS DISCONNECTED.
9. * (ASTERISK) IN PLACE OF A RESISTANCE READING INDICATES A CHARGING CAPACITOR.
10. ** (DOUBLE ASTERISK) SUPPLY VOLTAGE WHEN MICROPHONE SWITCH IS OPEN.
11. ALL MEASUREMENTS MADE BETWEEN POINT INDICATED AND CHASSIS.
12. NC INDICATES NO CONNECTION.

NOTES:

1. BETWEEN 235K AND 365K, DEPENDING UPON SETTING OF R128.
2. BETWEEN 780K AND 1.28 MEGOHM DEPENDING UPON SETTING OF R103.
3. THE FOLLOWING DIFFERENCES IN READINGS EXIST IN THE RECEIVER-TRANSMITTERS.

MODEL	ORDER NO.	TUBE	PIN	VOLTAGE	RESISTANCE
RT-66/GRC	1759-PHILA-51	V103	2	——	750K
		V103	6	——	120K
		V105	1	——	24
		V105	5	——	26
		V105	7	——	14
		V106	1	——	15
		V106	5	——	15
		V106	7	——	14
		V108	3	73	——
		V110	2 AND 3	60	——
		V110	6	——	150K
		V111	6	.15	170K
		V114	4	-1.5	——
		J106	12	——	17
		J107	5	——	15
		J108	12	——	2 MEG
RT-66/GRC	21434-PHILA-50	V110	2 AND 3	57	——
		V110	6	——	172K
RT-66/GRC	32137-PHILA-51	V110	2 AND 3	57	——
		V110	6	——	172K
RT-66/GRC	32138-PHILA-51	V110	2 AND 3	57	——
		V110	6	——	172K
RT-67/GRC	1759-PHILA-51	V103	6	——	73K
		V111	6	——	170K
		V112	6	——	158K
RT-67/GRC	18651-PHILA-49	V116	3	——	2 MEG
RT-67/GRC	32111-PHILA-51	——	——	——	——
RT-68/GRC	1759-PHILA-51	V103	6	——	270K
		V111	6	——	160K
		V112	6	——	168K
RT-68/GRC	16817-PHILA-51	SAME AS FOR 1759-PHILA-51			
RT-68/GRC	16821-PHILA-51	SAME AS ABOVE			
RT-68/GRC	18651-PHILA-49	SAME AS ABOVE			
RT-68/GRC	32114-PHILA-51	SAME AS ABOVE			
RT-68/GRC	32127-PHILA-51	SAME AS ABOVE			

TM 289-C1-241

data, i-f chassis, for all models except early
r No. 18651-Phila-49, and RT-67/GRC models
51 and 32111-Phila-51.

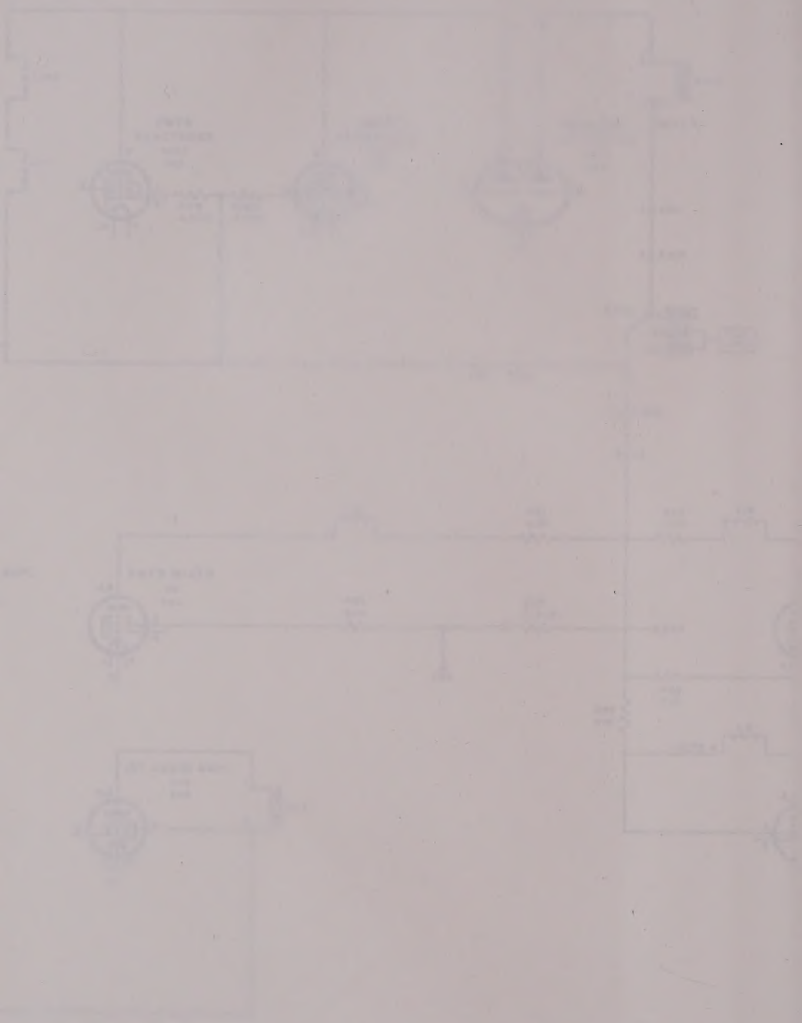

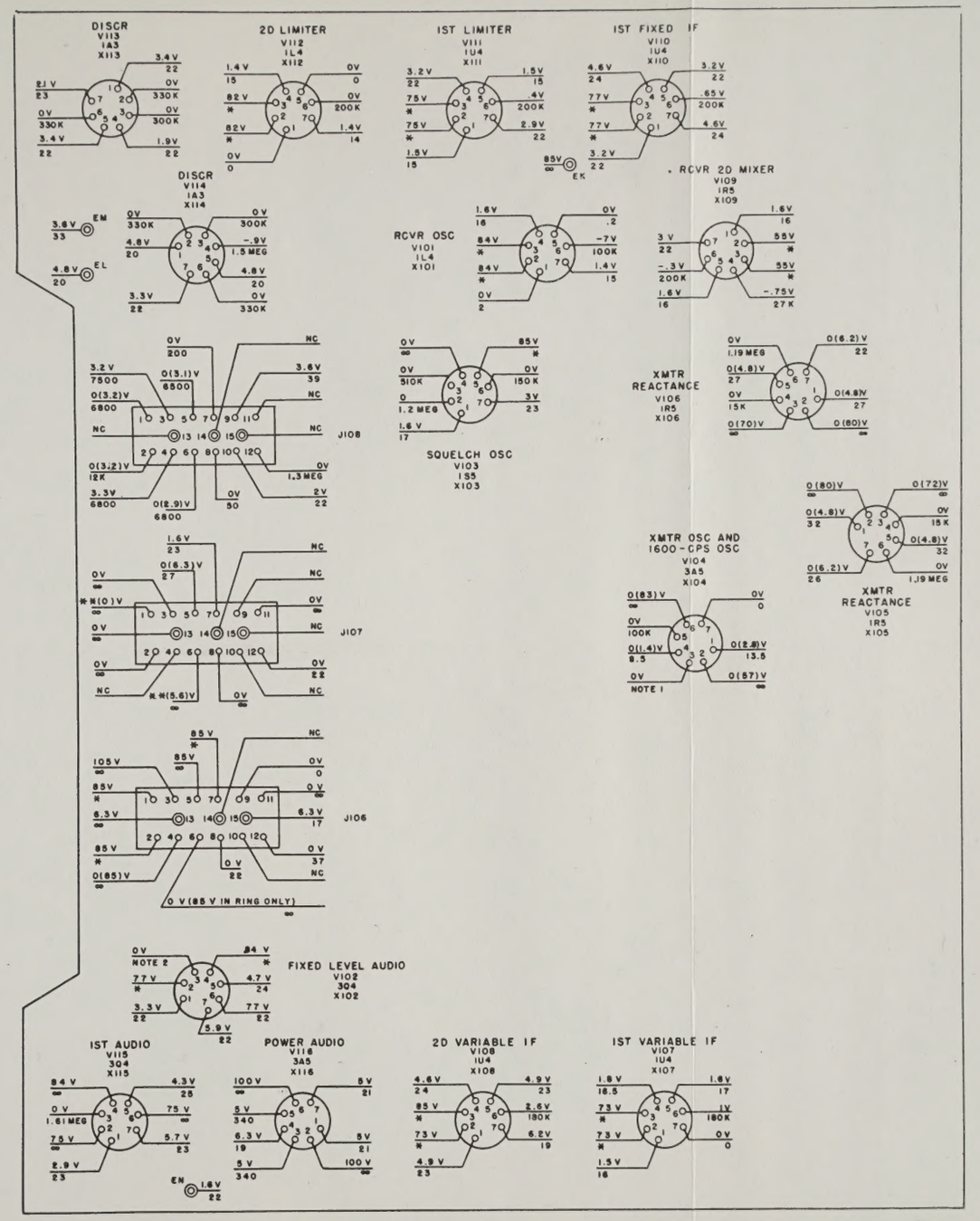

TEST CONDITIONS:

1. ALL READINGS OBTAINED WITH 20,000 OHMS-PER-VOLT METER.
2. VOLUME CONTROL IN EXTREME CLOCKWISE POSITION.
3. SQUELCH CONTROL IN EXTREME COUNTERCLOCKWISE POSITION (OFF).
4. FOR V104 VOLTAGE READINGS 5302 IN RING POSITION; FOR ALL OTHER READINGS IN DIAL LIGHT OFF POSITION.
5. JUMPER BETWEEN H AND J OF J312 CONNECTED.
6. NUMBERS ABOVE REFERENCE LINES ARE VOLTAGE READINGS OBTAINED WITH NO SIGNAL APPLIED.
7. WHERE TWO VOLTAGES ARE SHOWN THE VOLTAGE READING IN PARENTHESES IS OBTAINED WITH MICROPHONE PUSH-TO-TALK SWITCH CLOSED (I.E. TERMINAL K OF J312 GROUNDED); WHERE ONLY ONE READING IS GIVEN, IT APPLIES TO EITHER CONDITION.
8. NUMBERS BELOW REFERENCE LINES ARE RESISTANCE READINGS OBTAINED WITH ALL TUBES INSTALLED AND ALL PLUGS DISCONNECTED.
9. * (ASTERISK) IN PLACE OF A RESISTANCE READING INDICATES A CHARGING CAPACITOR.
10. ** (DOUBLE ASTERISK) SUPPLY VOLTAGE WHEN MICROPHONE SWITCH IS OPEN.
11. ALL MEASUREMENTS MADE BETWEEN POINT INDICATED AND CHASSIS.
12. NC INDICATES NO CONNECTION.

NOTES:

1. BETWEEN 235K AND 365K, DEPENDING UPON SETTING OF R128.
2. BETWEEN 780K AND 1.28 MEGOHM DEPENDING UPON SETTING OF R103.
3. THE FOLLOWING DIFFERENCES IN READINGS EXIST IN THE RECEIVER-TRANSMITTERS.

MODEL	ORDER NO.	TUBE	PIN	VOLTAGE	RESISTANCE
RT-66/GRC	1759-PHILA-51	V103	2	—	750K
		V103	6	—	120K
		V105	1	—	24
		V105	5	—	26
		V105	7	—	14
		V106	1	—	15
		V106	5	—	15
		V106	7	—	14
		V108	3	73	—
		V110	2 AND 3	60	—
		V110	6	—	150K
		V111	6	.15	170K
		V114	4	-1.5	—
		J106	12	—	17
		J107	5	—	15
		J108	12	—	2 MEG
RT-66/GRC	21434-PHILA-50	V110	2 AND 3	57	—
		V110	6	—	172K
RT-66/GRC	32137-PHILA-51	V110	2 AND 3	57	—
		V110	6	—	172K
RT-66/GRC	32138-PHILA-51	V110	2 AND 3	57	—
		V110	6	—	172K
RT-67/GRC	1759-PHILA-51	V103	6	—	73K
		V111	6	—	170K
		V112	6	—	158K
RT-67/GRC	18651-PHILA-49	V115	3	—	2 MEG
RT-67/GRC	32111-PHILA-51	—	—	—	—
RT-68/GRC	1759-PHILA-51	V103	6	—	270K
		V111	6	—	160K
		V112	6	—	168K
RT-68/GRC	16817-PHILA-51	SAME AS FOR 1759-PHILA-51			
RT-68/GRC	16821-PHILA-51	SAME AS ABOVE			
RT-68/GRC	18651-PHILA-49	SAME AS ABOVE			
RT-68/GRC	32114-PHILA-51	SAME AS ABOVE			
RT-68/GRC	32127-PHILA-51	SAME AS ABOVE			

TM 289-CI-241

Figure 68.—Resistance and voltage data, i–f chassis, for all models except early RT–66/GRC models bearing Order No. 18651–Phila–49, and RT–67/GRC models bearing Orders No. 16831–Phila–51 and 32111–Phila–51.

TEST CONDITIONS:

1. ALL READINGS OBTAINED WITH 20,000 OHMS-PER-VOLT METER.
2. VOLUME CONTROL IN EXTREME CLOCKWISE POSITION.
3. SQUELCH CONTROL IN EXTREME COUNTERCLOCKWISE POSITION (OFF).
4. FOR V104 VOLTAGE READINGS S302 IN RING POSITION; FOR ALL OTHER READINGS IN DIAL LIGHT OFF POSITION.
5. JUMPER BETWEEN H AND J OF J312 CONNECTED.
6. NUMBERS ABOVE REFERENCE LINES ARE VOLTAGE READINGS OBTAINED WITH NO SIGNAL APPLIED.
7. WHERE TWO VOLTAGES ARE SHOWN THE VOLTAGE READING IN PARENTHESES IS OBTAINED WITH MICROPHONE PUSH-TO-TALK SWITCH CLOSED (I.E. TERMINAL K OF J312 GROUNDED); WHERE ONLY ONE READING IS GIVEN, IT APPLIES TO EITHER CONDITION.
8. NUMBERS BELOW REFERENCE LINES ARE RESISTANCE READINGS OBTAINED WITH ALL TUBES INSTALLED AND ALL PLUGS DISCONNECTED.
9. * (ASTERISK) IN PLACE OF A RESISTANCE READING INDICATES A CHARGING CAPACITOR.
10. ** (DOUBLE ASTERISK) SUPPLY VOLTAGE WHEN MICROPHONE SWITCH IS OPEN.
11. ALL MEASUREMENTS MADE BETWEEN POINT INDICATED AND CHASSIS.
12. NC INDICATES NO CONNECTION.

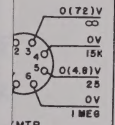

MTR
CTANCE
V105
1R5
K105

TM 289-61-242

-67/GRC models
ia-51.

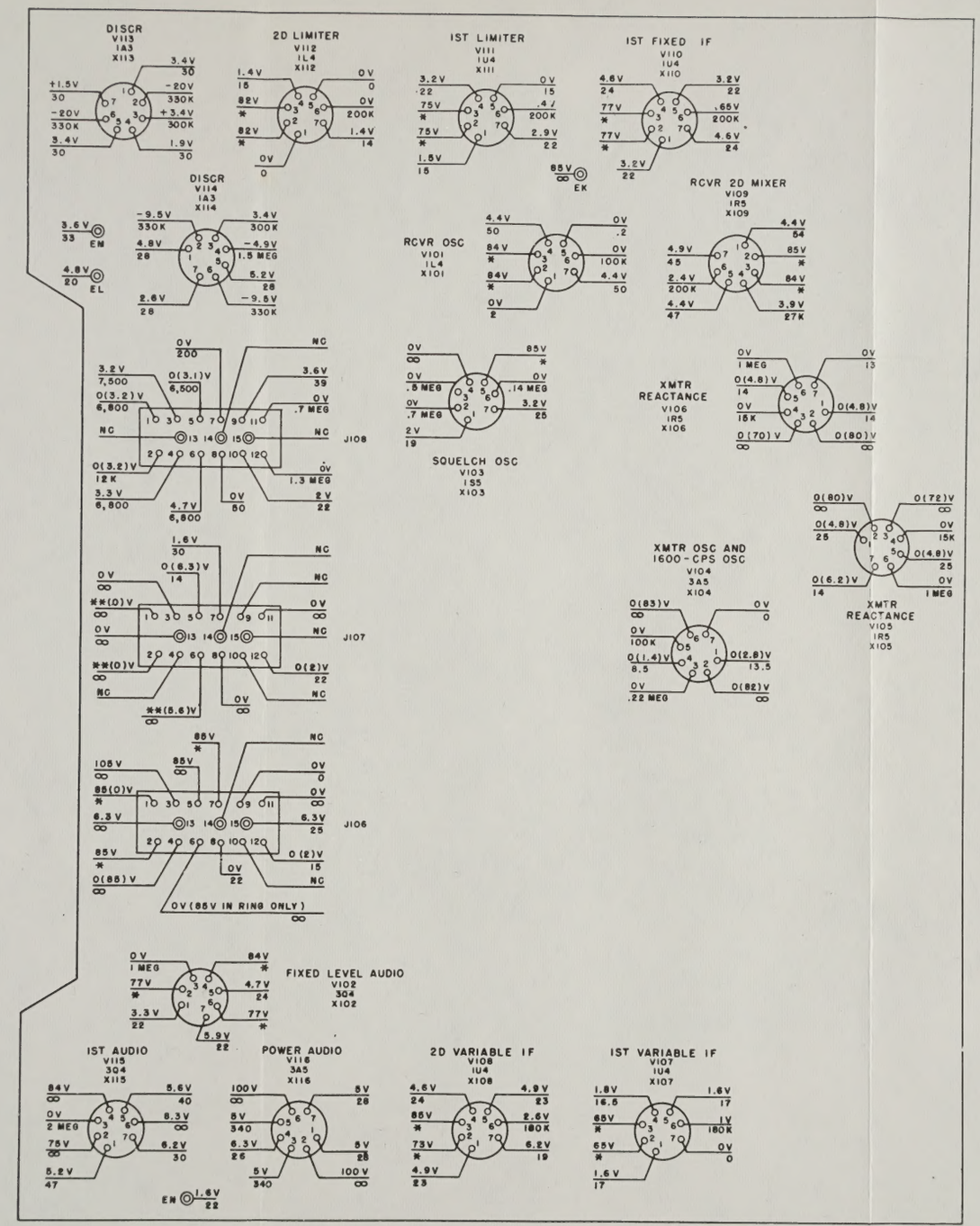

TEST CONDITIONS:

1. ALL READINGS OBTAINED WITH 20,000 OHMS-PER-VOLT METER.
2. VOLUME CONTROL IN EXTREME CLOCKWISE POSITION.
3. SQUELCH CONTROL IN EXTREME COUNTERCLOCKWISE POSITION (OFF).
4. FOR V104 VOLTAGE READINGS S302 IN RING POSITION; FOR ALL OTHER READINGS IN DIAL LIGHT OFF POSITION.
5. JUMPER BETWEEN H AND J OF J312 CONNECTED.
6. NUMBERS ABOVE REFERENCE LINES ARE VOLTAGE READINGS OBTAINED WITH NO SIGNAL APPLIED.
7. WHERE TWO VOLTAGES ARE SHOWN THE VOLTAGE READING IN PARENTHESES IS OBTAINED WITH MICROPHONE PUSH-TO-TALK SWITCH CLOSED (I.E. TERMINAL K OF J312 GROUNDED); WHERE ONLY ONE READING IS GIVEN, IT APPLIES TO EITHER CONDITION.
8. NUMBERS BELOW REFERENCE LINES ARE RESISTANCE READINGS OBTAINED WITH ALL TUBES INSTALLED AND ALL PLUGS DISCONNECTED.
9. * (ASTERISK) IN PLACE OF A RESISTANCE READING INDICATES A CHARGING CAPACITOR.
10. ** (DOUBLE ASTERISK) SUPPLY VOLTAGE WHEN MICROPHONE SWITCH IS OPEN.
11. ALL MEASUREMENTS MADE BETWEEN POINT INDICATED AND CHASSIS.
12. NC INDICATES NO CONNECTION.

TM 289-C1-242

Figure 69.—Resistance and voltage data, i-f chassis, for RT-67/GRC models bearing Orders No. 16831-Phia-51 and 32111-Phia-51.

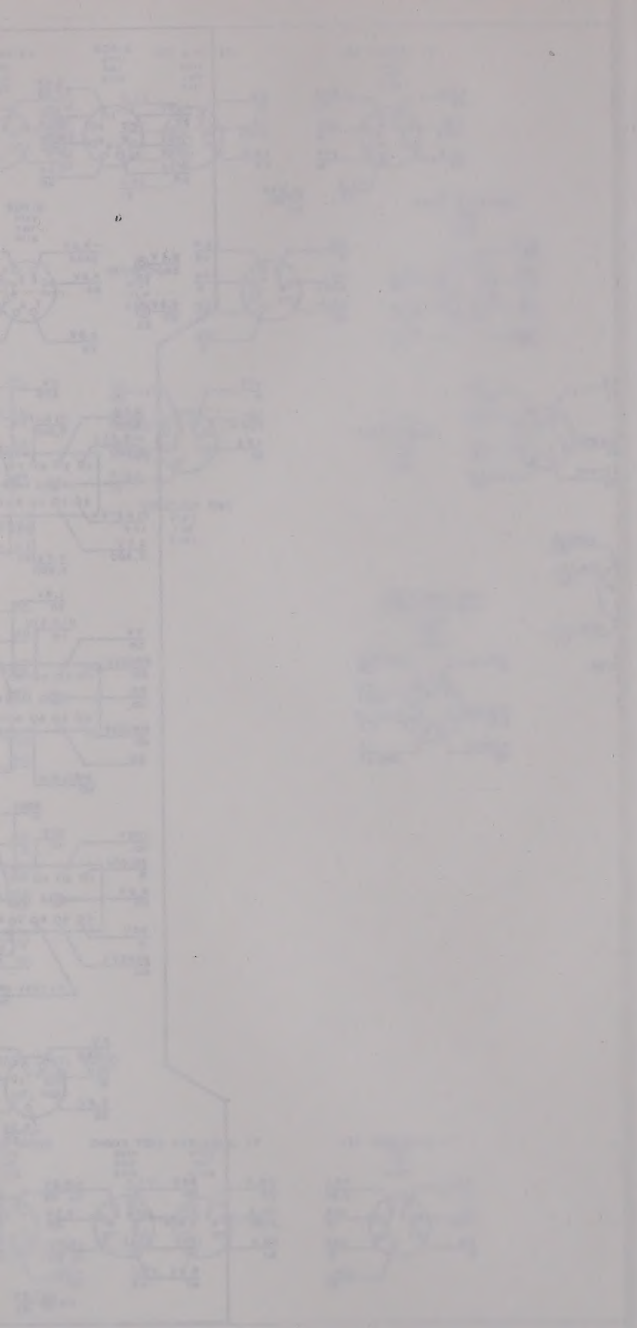

TEST CONDITIONS:

1. ALL READINGS OBTAINED WITH 20,000 OHMS-PER-VOLT METER.
2. VOLUME CONTROL IN EXTREME CLOCKWISE POSITION.
3. SQUELCH CONTROL IN EXTREME COUNTERCLOCKWISE POSITION (OFF).
4. FOR V104 VOLTAGE READINGS S302 IN RING POSITION; FOR ALL OTHER READINGS IN DIAL LIGHT OFF POSITION.
5. JUMPER BETWEEN H AND J OF J312 CONNECTED.
6. NUMBERS ABOVE REFERENCE LINES ARE VOLTAGE READINGS OBTAINED WITH NO SIGNAL APPLIED.
7. WHERE TWO VOLTAGES ARE SHOWN THE VOLTAGE READING IN PARENTHESES IS OBTAINED WITH MICROPHONE PUSH-TO-TALK SWITCH CLOSED (I.E. TERMINAL K OF J312 GROUNDED); WHERE ONLY ONE READING IS GIVEN, IT APPLIES TO EITHER CONDITION.
8. NUMBERS BELOW REFERENCE LINES ARE RESISTANCE READINGS OBTAINED WITH ALL TUBES INSTALLED AND ALL PLUGS DISCONNECTED.
9. * (ASTERISK) IN PLACE OF A RESISTANCE READING INDICATES A CHARGING CAPACITOR.
10. ** (DOUBLE ASTERISK) SUPPLY VOLTAGE WHEN MICROPHONE SWITCH IS OPEN.
11. ALL MEASUREMENTS MADE BETWEEN POINT INDICATED AND CHASSIS.
12. NC INDICATES NO CONNECTION.

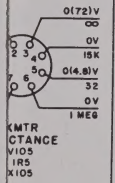

KMTR
CTANCE
V105
1R5
X105

TM 289-C1-243

-66/GRC models

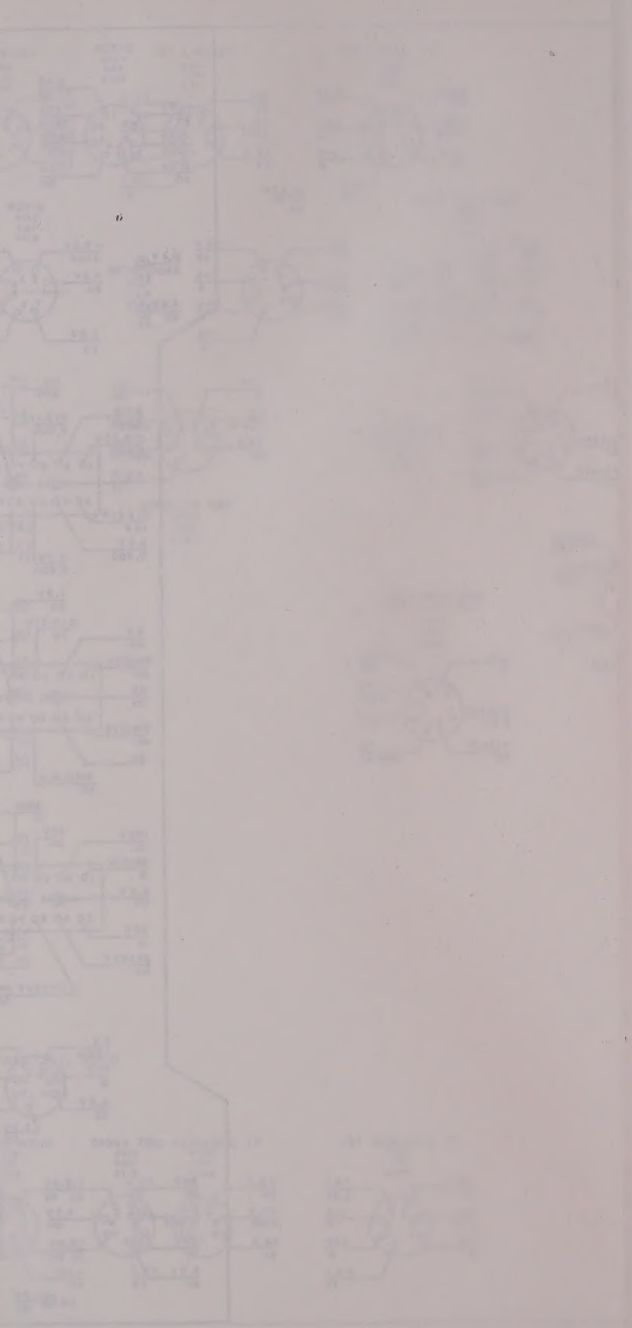

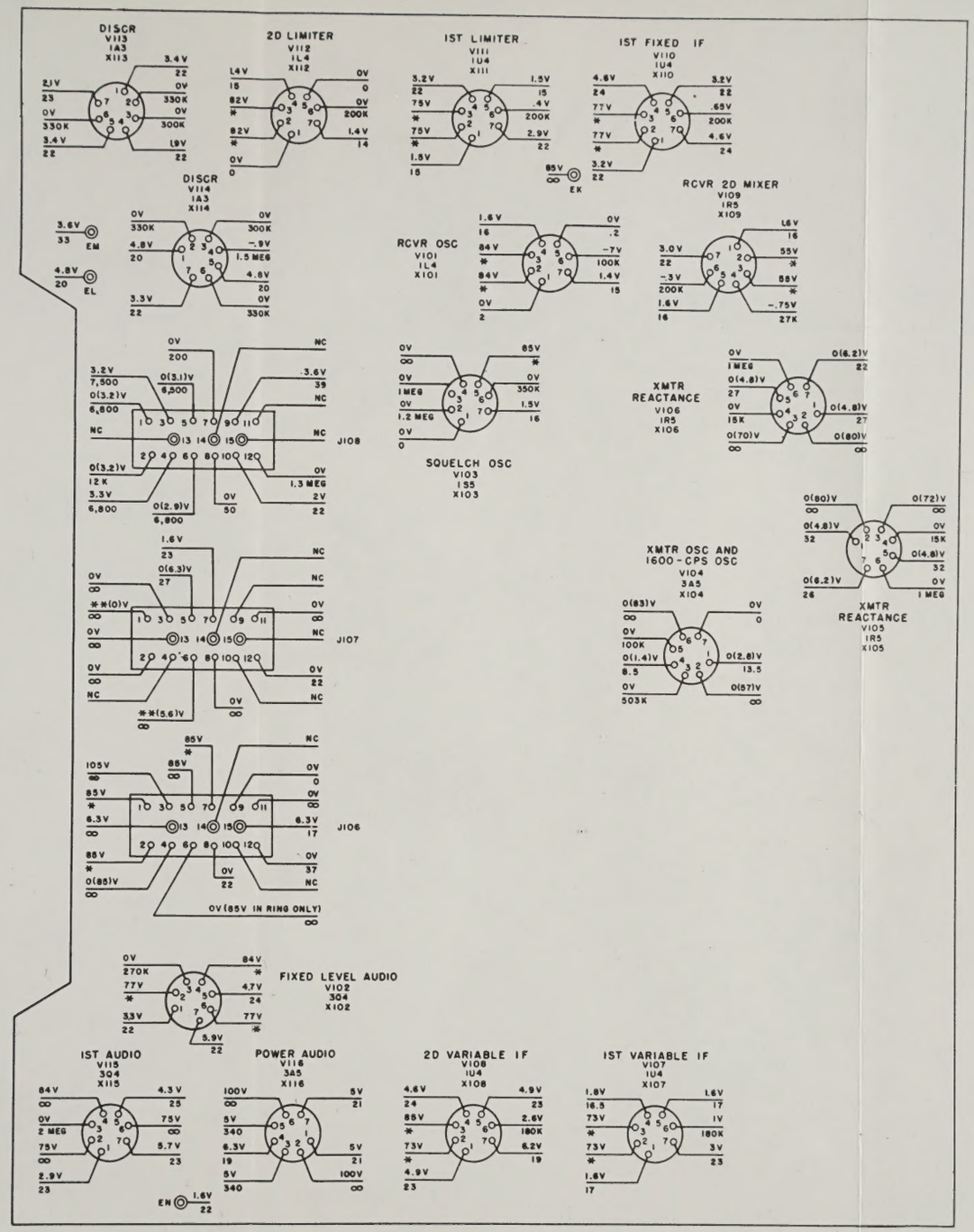

TEST CONDITIONS:

1. ALL READINGS OBTAINED WITH 20,000 OHMS-PER-VOLT METER.
2. VOLUME CONTROL IN EXTREME CLOCKWISE POSITION.
3. SQUELCH CONTROL IN EXTREME COUNTERCLOCKWISE POSITION (OFF).
4. FOR V104 VOLTAGE READINGS 5302 IN RING POSITION; FOR ALL OTHER READINGS IN DIAL LIGHT OFF POSITION.
5. JUMPER BETWEEN H AND J OF J312 CONNECTED.
6. NUMBERS ABOVE REFERENCE LINES ARE VOLTAGE READINGS OBTAINED WITH NO SIGNAL APPLIED.
7. WHERE TWO VOLTAGES ARE SHOWN THE VOLTAGE READING IN PARENTHESES IS OBTAINED WITH MICROPHONE PUSH-TO-TALK SWITCH CLOSED (I.E. TERMINAL K OF J312 GROUNDED); WHERE ONLY ONE READING IS GIVEN, IT APPLIES TO EITHER CONDITION.
8. NUMBERS BELOW REFERENCE LINES ARE RESISTANCE READINGS OBTAINED WITH ALL TUBES INSTALLED AND ALL PLUGS DISCONNECTED.
9. * (ASTERISK) IN PLACE OF A RESISTANCE READING INDICATES A CHARGING CAPACITOR.
10. ** (DOUBLE ASTERISK) SUPPLY VOLTAGE WHEN MICROPHONE SWITCH IS OPEN.
11. ALL MEASUREMENTS MADE BETWEEN POINT INDICATED AND CHASSIS.
12. NC INDICATES NO CONNECTION.

TM 289-C1-243

Figure 70.—Resistance and voltage data i–f chassis, for RT–66/GRC models bearing Order No. 18651–Phila–49.

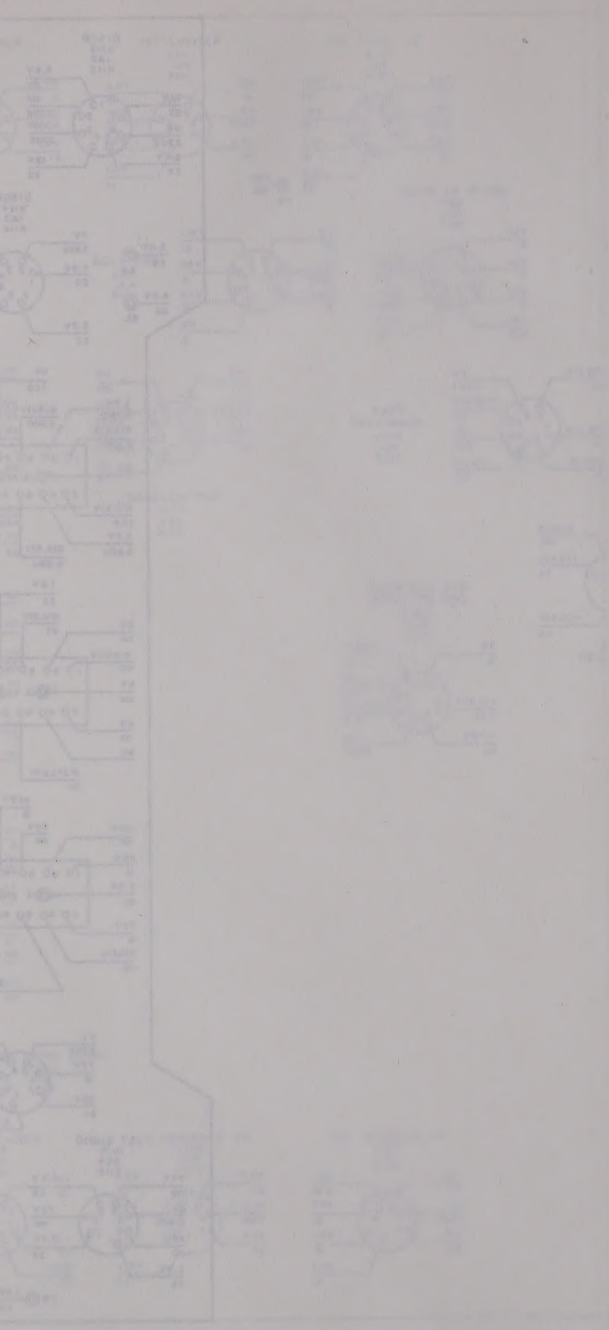

9. THE FOLLOWING CHART INDICATES THE DIFFERENCES IN COMPONENTS IN ALL RT-66/GRC EXCEPT THOSE BEARING ORDER NO. 18651-PHILA-49:

REF SYM	1759-PHILA-51	21434-PHILA-50	32137-PHILA-51	32138-PHILA-51
C-63 C-64	NOT USED			
C-76	NOT USED SEE NOTE 10			
C-137 C-138	NOT USED	NOT USED	NOT USED IN SERIAL NO. 7075 AND UP	
C-208		NOT USED	NOT USED	NOT USED
R-3		15K		
R-39				680 IN SERIAL NO. 3800 AND DOWN
R-40				2,700 IN SERIAL NO. 3800 AND DOWN
R-46				22K IN SERIAL NO. 3801 AND UP
R-47 R-48	6,200			6,200
R-51				1,800 IN SERIAL NO. 3800 AND DOWN
R-52				3,300 IN SERIAL NO. 3800 AND DOWN
R-54	NOT USED			100K IN SERIAL NO. 2715 AND DOWN
R-55	NOT USED SEE NOTE 10			
R-56 R-57			REPLACED WITH COILS L-14 AND L-15, RESPECTIVELY (5.3UH EACH)	REPLACED WITH COILS L-14 AND L-15, RESPECTIVELY (5.3UH EACH)
R-125 R-142	6,800			6,800
R-143	470			
R-182 R-183				NOT USED IN SERIAL NO. 2715 AND DOWN SEE NOTE 12
L-20	REPLACED WITH WIRE STRAP		REPLACED WITH WIRE STRAP IN SERIAL NO. 6840 AND UP	

10. IN MODELS BEARING ORDER NO. 1759-PHILA-51, THE BOTTOM OF RESISTOR R-1 IS CONNECTED DIRECTLY TO GROUND, RESISTORS R-54 AND R-55 AND CAPACITOR C-76 ARE NOT USED; AND THE CIRCUIT CONSISTING OF RELAY O-1, TERMINALS 4 OF J-4 AND P-304, AND TERMINALS 12 OF P-308 AND J-108 IS NO LONGER ASSOCIATED WITH THE CONTROL GRID CIRCUIT (PIN 1) OF RECEIVER R F AMPLIFIER V-1.

11. IN MODELS BEARING ORDER NO. 1759-PHILA-51, +85 VOLTS IS APPLIED TO THE SCREEN GRID CIRCUIT (PIN 3) OF RECEIVER FIRST MIXER V2 THROUGH TERMINALS 6 OF P-304 AND J-4 INSTEAD OF THROUGH NORMALLY CLOSED CONTACTS 9-10 OF RELAY Ø-101, TERMINALS 1 OF J-106 AND P-306, AND TERMINALS 9 OF P-304 AND J-4.

12. IN MODELS BEARING ORDER NO. 32138-PHILA-51, SERIAL NUMBERS 1-2715, CONTROL VOLTAGE FOR SQUELCH OSCILLATOR V-103 (PIN 6) IS OBTAINED ONLY FROM THE GRID, PIN 6 OF FIRST LIMITER V-111, THROUGH RESISTOR R-111. THE CIRCUIT CONNECTING THE GRID, PIN 6 OF FIRST FIXED IF V-110, TO THE GRID (PIN 6) OF THE SQUELCH OSCILLATOR THROUGH RESISTOR R-182 IS NOT USED.

13. IN MODELS BEARING ORDER NO. 1759-PHILA-51, THE CIRCUIT CONTAINING CAPACITOR C-78, THE CONTACTS OF RELAY O-1, TERMINALS 12 OF J-108 AND P-308, AND TERMINALS 4 OF P-304 AND J-4 IS CONNECTED TO THE GRID, PIN 3 OF FIRST AUDIO V-115 THROUGH RESISTOR R-181, 470K (ADDED), INSTEAD OF TO THE JUNCTION OF RESISTORS R-109 AND R-174.

14. T-1, T-2, T-6, T-7, AND T-9 REPRESENT COILS AND ASSOCIATED COMPONENTS MOUNTED IN A MULTISECTION SHIELD COMPARTMENT LOCATED ON THE WIRING SIDE OF THE R-F CHASSIS. THE COILS ARE L-1, L-3, L-12, L-16, L-17 L-18, AND L-22 L-23. ACCESS TO THE COILS AND COMPONENTS CAN BE OBTAINED BY REMOVING A COVER AT THE BOTTOM OF THE R-F CHASSIS.

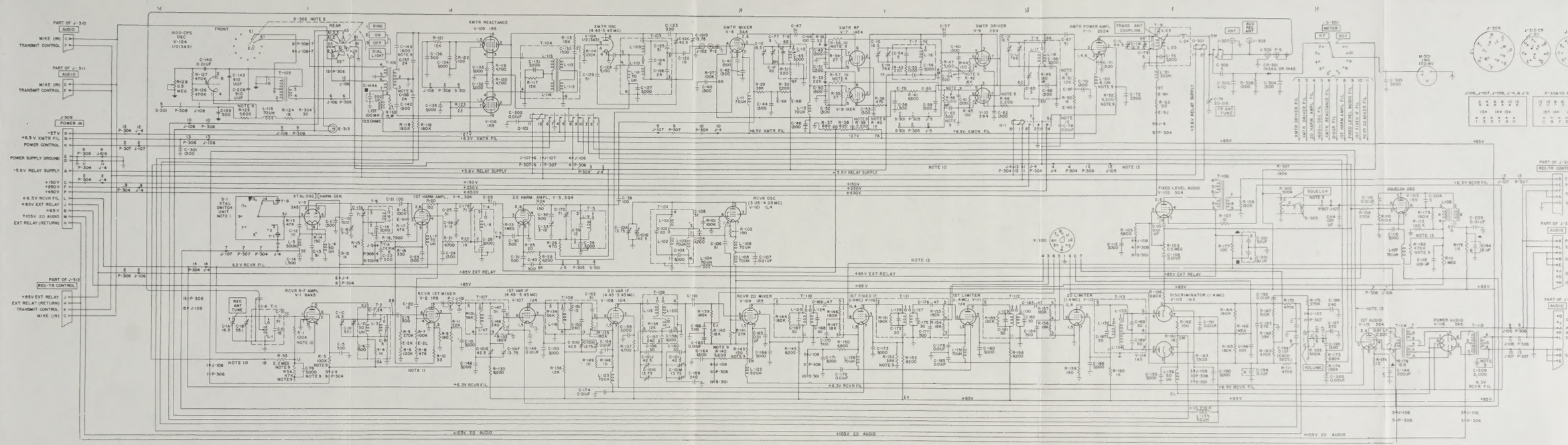

Figure 79.—Receiver-Transmitter RT-66/GRC, main schematic diagram, for all models except those bearing Order No. 18651-Phila-49.

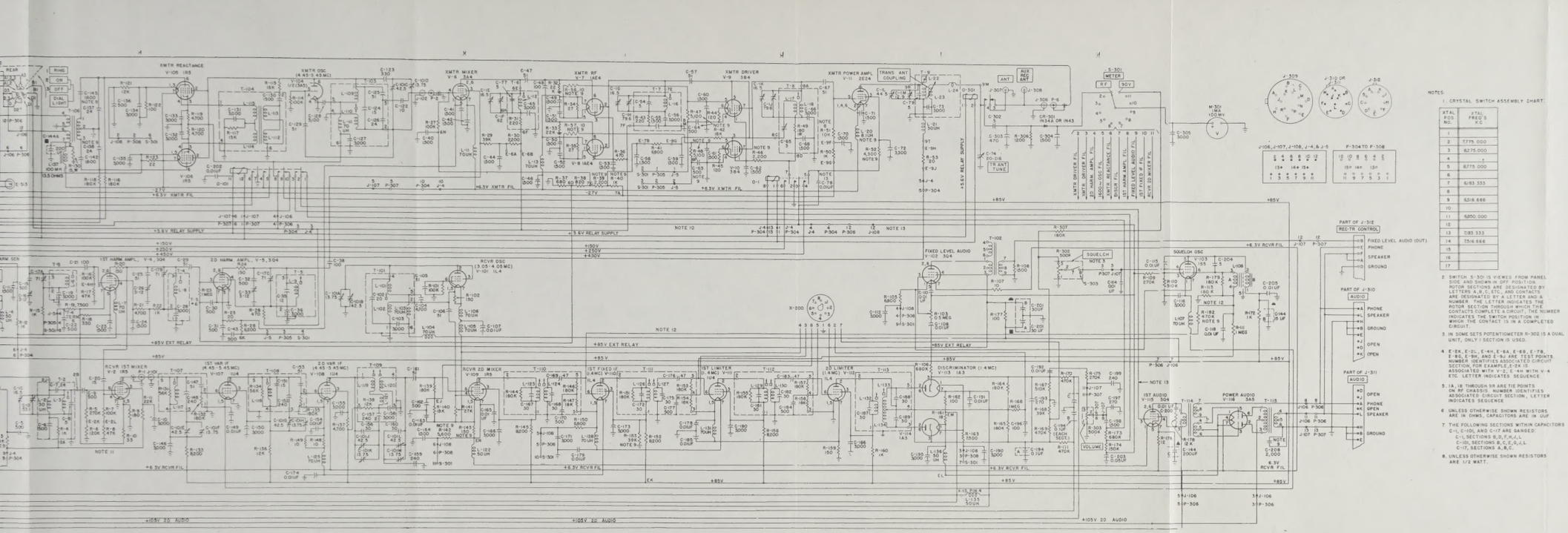

Figure 79.—Receiver-Transmitter RT-66/GRC, main schematic diagram, for all models except those bearing Order No. 18651-Phila-49.

NOTES:

1. CRYSTAL SWITCH ASSEMBLY CHART:

XTAL POS NO.	XTAL FREQ'S KC
1	
2	7775.000
3	6275.000
4	"
5	6775.000
6	"
7	6183.333
8	"
9	6516.666
10	"
11	6850.000
12	"
13	7183.333
14	7516.666
15	"
16	"
17	"

2. SWITCH S-301 IS VIEWED FROM PANEL SIDE AND SHOWN IN OFF POSITION. ROTOR SECTIONS ARE DESIGNATED BY LETTERS A, B, C, ETC., AND CONTACTS ARE DESIGNATED BY A LETTER AND A NUMBER. THE LETTER INDICATES THE ROTOR SECTION THROUGH WHICH THE CONTACTS COMPLETE A CIRCUIT; THE NUMBER INDICATES THE SWITCH POSITION IN WHICH THE CONTACT IS IN A COMPLETED CIRCUIT.
3. IN SOME SETS POTENTIOMETER R-302 IS A DUAL UNIT, ONLY 1 SECTION IS USED.
4. E-2X, E-2L, E-4H, E-6A, E-6B, E-7B, E-8G, E-9H, AND E-9J ARE TEST POINTS. NUMBER IDENTIFIES ASSOCIATED CIRCUIT SECTION. FOR EXAMPLE, E-2X IS ASSOCIATED WITH V-2, E-4H WITH V-4 ETC. LETTER INDICATES SEQUENCE.
5. 1A, 1B THROUGH 9R ARE TIE POINTS ON RF CHASSIS. NUMBER IDENTIFIES ASSOCIATED CIRCUIT SECTION; LETTER INDICATES SEQUENCE.
6. UNLESS OTHERWISE SHOWN RESISTORS ARE IN OHMS, CAPACITORS ARE IN MMF.
7. THE FOLLOWING SECTIONS WITHIN CAPACITORS C-1, C-100, AND C-117 ARE GANGED:
   C-1, SECTIONS B,D,F,H,J,L.
   C-100, SECTIONS B,C,E,G,J,L.
   C-117, SECTIONS A,B,C.
8. UNLESS OTHERWISE SHOWN RESISTORS ARE 1/2 WATT.
9. THE FOLLOWING CHART INDICATES THE DIFFERENCES IN COMPONENTS IN ALL RT-66/GRC EXCEPT THOSE BEARING ORDER NO. 18651-PHILA-49.

REF SYM	1759-PHILA-51	21434-PHILA-50	32137-PHILA-51	32138-PHILA-51
C-63 C-64	NOT USED			
C-76	NOT USED SEE NOTE 10			
C-137 C-138	NOT USED	NOT USED	NOT USED IN SERIAL NO. 7075 AND UP.	
J-208		NOT USED	NOT USED	NOT USED
R-3		15K		
R-39				680 IN SERIAL NO. 3800 AND DOWN
R-40				2700 IN SERIAL NO. 3800 AND DOWN
R-46				22K IN SERIAL NO. 3801 AND UP
R-47 R-48	6,200			6,200
R-51				1,800 IN SERIAL NO. 3800 AND DOWN
R-52				3,300 IN SERIAL NO. 3800 AND DOWN
R-54	NOT USED			100K IN SERIAL NO. 2715 AND DOWN
R-55	NOT USED SEE NOTE 10			22K IN SERIAL NO. 2715 AND DOWN
R-56 R-57			REPLACED WITH COILS L-14 AND L-15, RESPECTIVELY (5.3UH EACH)	REPLACED WITH COILS L-14 AND L-15, RESPECTIVELY (5.3UH EACH)
R-125 R-142	6,800			6,800
R-143	470			
R-182 R-183				NOT USED IN SERIAL NO. 2715 AND DOWN SEE NOTE 12
L-20	REPLACED WITH WIRE STRAP		REPLACED WITH WIRE STRAP IN SERIAL NO. 6640 AND UP	

10. IN MODELS BEARING ORDER NO. 1759-PHILA-51, THE BOTTOM OF RESISTOR R-1 IS CONNECTED DIRECTLY TO GROUND, RESISTORS R-54 AND R-55 AND CAPACITOR C-76 ARE NOT USED, AND THE CIRCUIT CONSISTING OF RELAY O-1, TERMINALS 4 OF J-4 AND P-304, AND TERMINALS 12 OF P-308 AND J-108 IS NO LONGER ASSOCIATED WITH THE CONTROL GRID CIRCUIT (PIN 1) OF RECEIVER R.F. AMPLIFIER V-1.
11. IN MODELS BEARING ORDER NO. 1759-PHILA-51, +85 VOLTS IS APPLIED TO THE SCREEN GRID CIRCUIT (PIN 3) OF RECEIVER FIRST MIXER V2 THROUGH TERMINALS 6 OF P-304 AND J-4 INSTEAD OF THROUGH NORMALLY CLOSED CONTACTS 5-10 OF RELAY R-101, TERMINALS 1 OF J-106 AND P-308, AND TERMINALS 9 OF P-304 AND J-4.
12. IN MODELS BEARING ORDER NO. 32138-PHILA-51, SERIAL NUMBERS 1-2715, CONTROL VOLTAGE FOR SQUELCH OSCILLATOR V-103 (PIN 6) IS OBTAINED ONLY FROM THE GRID, PIN 6 OF FIRST LIMITER V-111, THROUGH RESISTOR R-111. THE CIRCUIT CONNECTING THE GRID, PIN 6 OF FIRST FIXED IF V-110, TO THE GRID (PIN 6) OF THE SQUELCH OSCILLATOR THROUGH RESISTOR R-182 IS NOT USED.
13. IN MODELS BEARING ORDER NO. 1759-PHILA-51, THE CIRCUIT CONTAINING CAPACITOR C-76, THE CONTACTS OF RELAY O-1, TERMINALS 12 OF J-108 AND P-308, AND TERMINALS 4 OF P-304 AND J-4 IS CONNECTED TO THE GRID, PIN 3 OF FIRST AUDIO V-115 THROUGH RESISTOR R-181, 470K (ADDED), INSTEAD OF TO THE JUNCTION OF RESISTORS R-109 AND R-174.
14. T-1, T-2, T-6, T-7, AND T-9 REPRESENT COILS AND ASSOCIATED COMPONENTS MOUNTED IN A MULTISECTION SHIELD COMPARTMENT LOCATED ON THE WIRING SIDE OF THE R-F CHASSIS. THE COILS ARE L-1, L-3, L-12, L-16, L-17, L-18, AND L-22 L-23. ACCESS TO THE COILS AND COMPONENTS CAN BE OBTAINED BY REMOVING A COVER AT THE BOTTOM OF THE R-F CHASSIS.

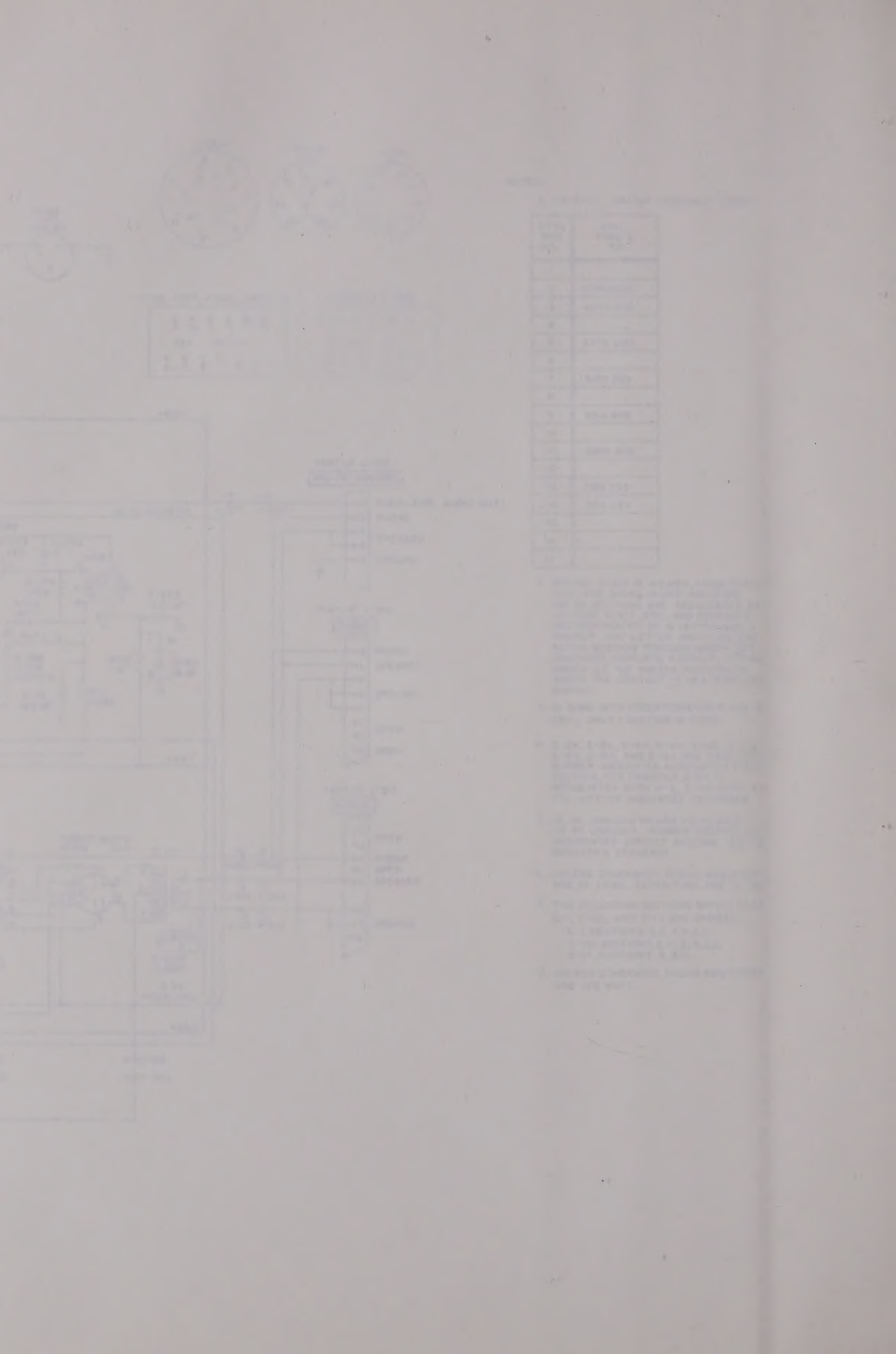

ASSEMBLY CHART.

IEWED FROM PANEL
N OFF POSITION.
RE DESIGNATED BY
C., AND CONTACTS
Y A LETTER AND A
TER INDICATES THE
ROUGH WHICH THE CONTACTS
IIT; THE NUMBER
ITCH POSITION IN
CT IS IN A COMPLETED

302 IS A DUAL UNIT,
IS USED.

E-6A, E-6B, E-7B,
-9J ARE TEST POINTS.
S ASSOCIATED CIRCUIT
MPLE, E-2K IS
V-2; E-4H WITH V-4
CATES SEQUENCE.

ARE TIE POINTS
UMBER IDENTIFIES
IIT SECTION, LETTER
NCE

E SHOWN RESISTORS
ACITORS ARE IN UUF.

ECTIONS WITHIN
-101, AND C-17 ARE GANGED.
B, D, F, H, J, L
S B, C, E, G, J, L
A, B, C

E SHOWN, RESISTORS

9. THE FOLLOWING CHART INDICATES THE DIFFERENCES IN COMPONENTS IN EARLY AND LATER RT-66/GRC MODELS BEARING ORDER NO. 18651-PHILA-49:

REF SYM	EARLY MODELS	LATE MODELS
C-4		NOT USED
C-39		NOT USED
C-78	NOT USED	
C-79	NOT USED	
C-204 C-205	NOT USED	
C-303	220	
R-2		REPLACED WITH WIRE STRAP
R-3	15K	
R-56		NOT USED
R-104		REPLACED WITH WIRE STRAP
R-106	3.9 MEG	
R-110	1 MEG	
R-113	680K	
R-116 R-118	120K	
R-301		REPLACED WITH WIRE STRAP
L-24	REPLACED WITH WIRE STRAP	
V-110	1U4	

10. IN EARLY MODELS, CONTROL VOLTAGE FOR SQUELCH OSCILLATOR V-103 (PIN 6) IS OBTAINED FROM THE GRID, PIN 6 OF SECOND LIMITER V-112 THROUGH RESISTOR R-111. THE CONNECTION OF R-111 IS SHIFTED FROM THE GRID, PIN 6 OF FIRST LIMITER V-111 TO THE GRID, PIN 6 OF SECOND LIMITER V-112.

11. IN EARLY MODELS, THE FILAMENTS, AND ASSOCIATED COMPONENTS OF SQUELCH OSCILLATOR V-103 AND FIRST VARIABLE IF V-107 ARE REARRANGED AS FOLLOWS:
PIN 1 OF V-103 IS CONNECTED TO GROUND.
PINS 1,5 OF V-107 IS CONNECTED TO PIN 7 V-103 THROUGH COIL L-107.
PIN 7 OF V-107 IS CONNECTED TO PIN 1 OF V-102.
CAPACITOR C-116 IS CONNECTED BETWEEN PIN 7 OF V-103 AND GROUND.
CAPACITOR C-149 IS CONNECTED BETWEEN PIN 7 OF V-107 AND GROUND.

12. T-1, T-2, T-6, T-7, T-8, AND T-9 REPRESENT COILS AND ASSOCIATED COMPONENTS MOUNTED IN A MULTISECTION SHIELD COMPARTMENT LOCATED ON THE WIRING SIDE OF THE R-F CHASSIS. THE COILS ARE L-1, L-3, L-12, L-16, L-17 L-18, AND L-22 L-23. ACCESS TO THE COILS AND COMPONENTS CAN BE OBTAINED BY REMOVING A COVER AT THE BOTTOM OF THE R-F CHASSIS.

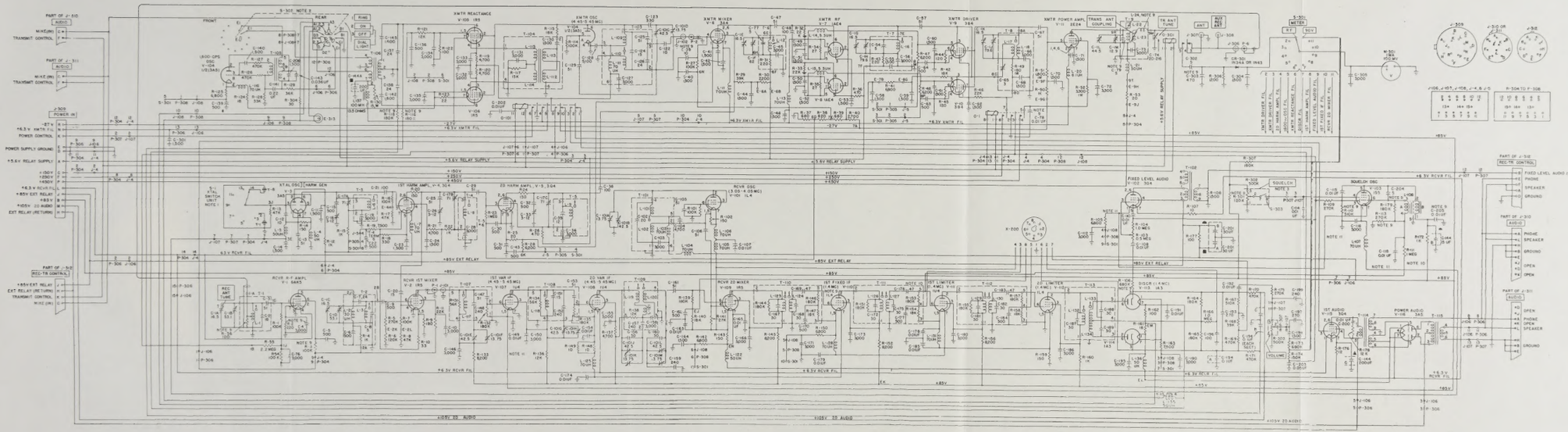

Figure 88.—Receiver-Transmitter RT-66/GRC, main schematic diagram, for models bearing Order No. 18651-Phila-49.

NOTES:

1. CRYSTAL SWITCH ASSEMBLY CHART.

XTAL POS NO.	XTAL FREQ KC
1	
2	7775.000
3	8175.000
4	
5	8775.000
6	
7	6483.333
8	
9	5516.666
10	
11	6850.000
12	
13	7483.333
14	7516.666
15	
16	
17	

2. SWITCH S-301 IS VIEWED FROM PANEL. REAR VIEW. SWITCH SECTIONS AND MOTOR SECTIONS ARE DESIGNATED BY LETTERS A, B, C, ETC., AND CONTACTS ARE DESIGNATED BY A LETTER AND A NUMBER. THE LETTER INDICATES THE SECTION IN WHICH THE MOVABLE CONTACTS COMPLETE A CIRCUIT. THE NUMBER INDICATES THE SWITCH POSITION IN WHICH THE CONTACT IS IN A COMPLETED CIRCUIT.

3. POTENTIOMETER R-302 IS A DUAL UNIT, ONLY 1 SECTION IS USED.

4. E-EK, E-EL, E-AM, E-AN, E-AB, E-7B, E-8B, E-BN, AND E-BO ARE TEST POINTS FOR THE ASSOCIATED CIRCUIT SECTION. FOR EXAMPLE, E-EK IS ASSOCIATED WITH V-E, E-AM WITH V-A ETC. LETTER INDICATES SEQUENCE.

5. IN J2 THROUGH J9 ARE THE POINTS FOR THE ASSOCIATED CIRCUIT SECTIONS. ASSOCIATED CIRCUIT SECTION, LETTER INDICATES SEQUENCE.

6. UNLESS OTHERWISE SHOWN RESISTORS ARE IN OHMS, CAPACITORS ARE IN UUF.

7. THE FOLLOWING SECTIONS WITHIN CAPACITORS, SWITCHES, AND CKTS ARE GANGED: C-1, SECTIONS 1, 2, 3, 4, C.C.I. C-17, SECTIONS 5, 6, 7, 8, C.C.I.

8. UNLESS OTHERWISE SHOWN, RESISTORS ARE 1/2 WATT.

9. THE FOLLOWING CHART INDICATES THE DIFFERENCES IN COMPONENTS IN EARLY AND LATER RT-66/GRC MODELS BEARING ORDER NO. 18651-PHILA-49.

REF SYM	EARLY MODELS	LATE MODELS
C-4		NOT USED
C-39		NOT USED
C-75	NOT USED	
C-79	NOT USED	
C-84	NOT USED	
C-205	NOT USED	
C-309	220	
R-1		REPLACED WITH WIRE STRAP
R-3	15K	
R-156		NOT USED
R-159		REPLACED WITH WIRE STRAP
R-106	5.6 MEG	
R-105	1 MEG	
R-113	680K	
R-116	120K	
R-301		REPLACED WITH WIRE STRAP
L-24	REPLACED WITH WIRE STRAP	
V-108	6AK5	

10. IN EARLY MODELS, CONTROL VOLTAGE FOR SQUELCH OSCILLATOR V-103 (PIN 6) IS OBTAINED FROM THE GRID, PIN 6 OF SECOND LIMITER V-113. THROUGH RESISTOR R-106, THE CONNECTION OF R-105 IS SHIFTED FROM THE GRID, PIN 6, OF FIRST LIMITER V-113 TO THE GRID, PIN 6, OF SECOND LIMITER V-113.

11. IN EARLY MODELS, THE FILAMENTS, AND ASSOCIATED COMPONENTS OF SQUELCH OSCILLATOR V-103 AND FIRST VARIABLE IF V-107 ARE REARRANGED AS FOLLOWS: PIN 7 OF V-103 IS CONNECTED TO GROUND. PINS 1,3 OF V-107 IS CONNECTED TO PIN 7 V-103 THROUGH COIL L-107. PIN 7 OF V-107 IS CONNECTED TO PIN 1 OF V-102. CAPACITOR C-108 IS CONNECTED BETWEEN PIN 7 OF V-103 AND GROUND. CAPACITOR C-149 IS CONNECTED BETWEEN PIN 7 OF V-107 AND GROUND.

12. T-1, T-2, T-6, T-7, T-8, AND T-9 REPRESENT COILS AND ASSOCIATED COMPONENTS MOUNTED IN A MULTI-SECTION SHIELD COMPARTMENT LOCATED ON THE WIRING SIDE OF THE R-F CHASSIS. THE COILS ARE: L-1, L-3, L-12, L-14, L-17, L-18, AND L-23. ACCESS TO THE COILS AND COMPONENTS CAN BE OBTAINED BY REMOVING A COVER AT THE BOTTOM OF THE R-F CHASSIS.

TM 283-61-275

11-PHILA-51
SED IN SOME S
SERIAL NO 3732
SERIAL NO. 13671 WN
SERIAL NO. 14940
ED SEE NOTE 12
ED WITH A WIRE IN SERIAL NO. ND DOWN
ED IN SERIAL 71 AND DOWN

H NORMALLY
MINALS 9 OF

11. IN THE FOLLOWING MODELS, CONTROL VOLTAGE FOR SQUELCH OSCILLATOR V-103 IS OBTAINED ONLY FROM THE GRID, PIN 6 OF FIRST LIMITER V-111, THROUGH RESISTOR R-111. THE CIRCUIT THAT CONNECTS THE GRID, PIN 6 OF SECOND LIMITER V-112, TO THE SQUELCH OSCILLATOR THROUGH RESISTOR R-184 IS NOT USED.

ORDER NO.	SERIAL NO.
16831-PHILA-51	ALL
18651-PHILA-49	ALL
32111-PHILA-51	1-7249

12. IN THE FOLLOWING MODELS, THE CIRCUIT CONTAINING CAPACITOR C-78, THE CONTACTS OF RELAY O-1 TERMINALS 5 OF J-5 AND P-305, TERMINALS 11 OF P-308 AND J-108, AND RESISTOR R-181 IS CONNECTED TO THE JUNCTION OF RESISTORS R-109 AND R-174, INSTEAD OF TO THE GRID, PIN 3 OF V-115. R-181 IS REPLACED WITH A WIRE STRAP.

ORDER NO.	SERIAL NO
16831-PHILA-51	ALL
18651-PHILA-49	ALL
32111-PHILA-51	1-13671

13. IN EARLY MODELS BEARING ORDER NO. 18651-PHILA-49, CRYSTAL RECTIFIER CR-301 IS SUBSTITUTED FOR RESISTOR R-308, AND CAPACITOR C-303 (ADDED), 220 UUF, IS SUBSTITUTED FOR CRYSTAL RECTIFIER CR-301.

14. T-1, T-2, T-6, T-7, T-8 AND T-9 REPRESENT COILS AND ASSOCIATED COMPONENTS MOUNTED IN A MULTISECTION SHIELD COMPARTMENT LOCATED ON THE WIRING SIDE OF THE R-F CHASSIS. THE COILS ARE L-1, L-3, L-12, L-16, L-17 L-18, AND L-22 L-23. ACCESS TO THE COILS AND COMPONENTS CAN BE OBTAINED BY REMOVING A COVER AT THE BOTTOM OF THE R-F CHASSIS

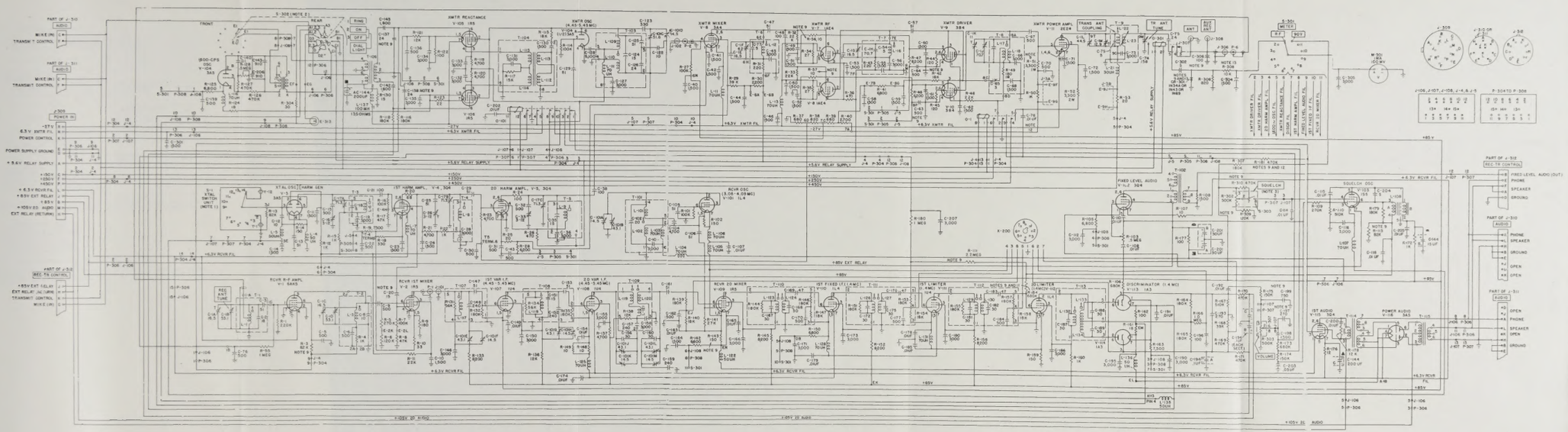

Figure 81.—Receiver-Transmitter RT-67/GRC, main schematic diagram, for all models.

NOTES:

1. CRYSTAL SWITCH ASSEMBLY CHART.

XTAL POS NO	XTAL FREQ'S MC
1	
2	7516.666
3	7850.000
4	8183.333
5	8516.666
6	8850.000
7	6887.500
8	
9	7137.500
10	7387.500
11	7637.500
12	7887.500
13	8137.500
14	6387.500
15	
16	
17	

2. SWITCH S-302 IS VIEWED FROM PANEL SIDE AND SHOWN IN OFF POSITION. ROTOR SECTIONS ARE DESIGNATED BY LETTERS A, B, C, ETC, AND CONTACTS ARE DESIGNATED BY A LETTER AND A NUMBER. THE LETTER INDICATES THE ROTOR SECTION THROUGH WHICH THE CONTACTS COMPLETE A CIRCUIT; THE NUMBER INDICATES THE SWITCH POSITION IN WHICH THE CONTACT IS IN A COMPLETED CIRCUIT.

3. POTENTIOMETER R-302 IS A DUAL UNIT, ONLY 1 SECTION IS USED IN SOME SETS. R302 IS A SINGLE UNIT.

4. E-2A, E-2B, E-4A, E-4B, E-7B, E-8B, E-9A, AND E-9B ARE TEST POINTS. NUMBER IDENTIFIES ASSOCIATED CIRCUIT SECTION. FOR EXAMPLE, E-2A IS ASSOCIATED WITH V-2; E-4A WITH V-4 ETC. LETTER INDICATES SEQUENCE.

5. 1A, 1B THROUGH 9A AND 9B POINTS ON RF CHASSIS. NUMBER IDENTIFIES ASSOCIATED CIRCUIT SECTION. LETTER INDICATES SEQUENCE.

6. UNLESS OTHERWISE SHOWN RESISTORS ARE IN OHMS, CAPACITORS ARE IN UUF.

7. THE FOLLOWING SECTIONS WITHIN CAPACITORS C-1, C-10 AND C-17 ARE GANGED.
   C-1 SECTIONS B,D,F,H,J,L
   C-10 SECTIONS B,C,F,G,J,L
   C-17 SECTIONS A,B,C

8. UNLESS OTHERWISE SHOWN, RESISTORS ARE 1/2 WATT.

9. THE FOLLOWING CHART INDICATES THE DIFFERENCES IN COMPONENTS RT-67/GRC MODELS.

REF SYM	1759-PHILA-51	1685-PHILA-51	1651-PHILA-49	32[illegible]
C-20	51			
C-63, C-64	NOT USED			
C-51, C-158	NOT USED			
C-197	NOT USED			
C-199		240	240	
C-303			220, ADDED IN EARLY MODELS SEE NOTE 13	
C-306	NOT USED	NOT USED IN SERIAL NO 3994 AND DOWN	NOT USED IN EARLY MODELS	NOT USE[illegible] MODELS [illegible] 8 2A IN [illegible] AND UP
R-3				
R-51			5,000 IN EARLY MODELS	
R-56, R-57		REPLACED WITH COILS L-14 AND L-15(5.5UH EACH) RESPECTIVELY	REPLACED WITH COILS L-14 AND L-15(5.5UH EACH) RESPECTIVELY	
R-111			1 MEG	
R-113		180K	180K	180K IN [illegible] AND DOWN
R-143				470K IN [illegible] AND UP
R-175		270K	270K	
R-181		NOT USED SEE NOTE 12	NOT USED SEE NOTE 12	NOT USED
R-184			NOT USED SEE NOTE 11	
R-308			NOT USED IN EARLY MODELS SEE NOTE 13	
R-309		REPLACED WITH A WIRE STRAP	REPLACED WITH A WIRE STRAP	REPLACED [illegible] STRAP IN [illegible]
R-30		NOT USED	NOT USED	NOT USED [illegible] NO 1587

10. IN THE FOLLOWING MODELS, 4.85 VOLTS IS APPLIED TO THE SCREEN GRID CIRCUIT THROUGH CLOSED CONTACTS 9-10 OF RELAY D-101, TERMINALS 1 OF J-106 AND P-306, AND TERMINALS P-304 AND J-4, INSTEAD OF THROUGH TERMINALS 6 OF P 304 AND J-4.

ORDER NO	SERIAL NO
1685-PHILA-51	ALL
1651-PHILA-49	ALL
3211-PHILA-51	1-1367

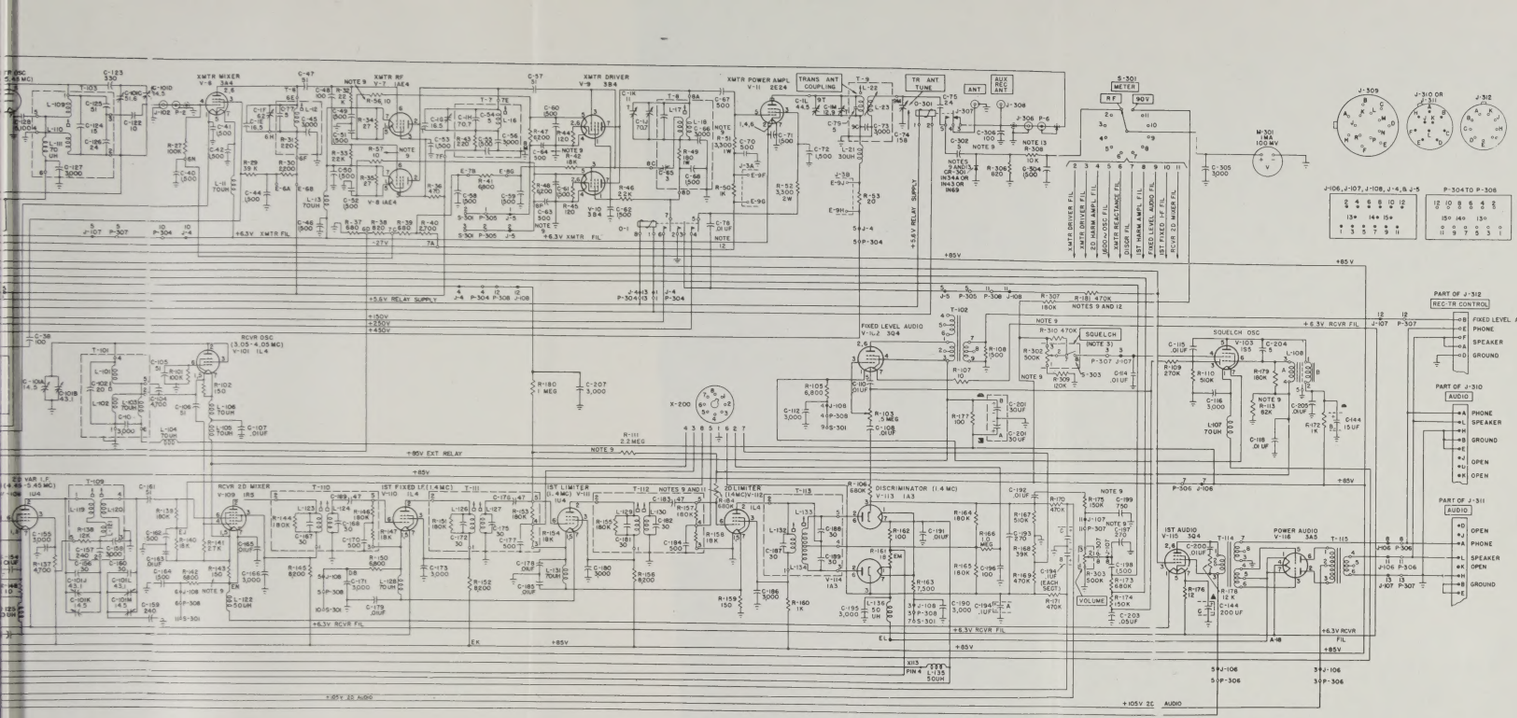

Figure 81.—Receiver-Transmitter RT-67/GRC, main schematic diagram, for all models.

NOTES:

1. CRYSTAL SWITCH ASSEMBLY CHART.

XTAL POS NO.	XTAL FREQ'S MC
1	
2	7516.666
3	7850.000
4	8183.333
5	8516.666
6	8850.000
7	6887.500
8	
9	7137.500
10	7387.500
11	7637.500
12	7887.500
13	8137.500
14	8387.500
15	
16	
17	

2. SWITCH S-302 IS VIEWED FROM PANEL SIDE AND SHOWN IN OFF POSITION. ROTOR SECTIONS ARE DESIGNATED BY LETTERS A, B, C, ETC., AND CONTACTS ARE DESIGNATED BY A LETTER AND A NUMBER. THE LETTER INDICATES THE ROTOR SECTION THROUGH WHICH THE CONTACTS COMPLETE A CIRCUIT; THE NUMBER INDICATES THE SWITCH POSITION IN WHICH THE CONTACT IS IN A COMPLETED CIRCUIT.

3. POTENTIOMETER R-302 IS A DUAL UNIT, ONLY 1 SECTION IS USED IN SOME SETS R302 IS A SINGLE UNIT.

4. E-2X, E-2L, E-4H, E-6A, E-6B, E-7B, E-8G, E-9H, AND E-9J ARE TEST POINTS. NUMBER IDENTIFIES ASSOCIATED CIRCUIT SECTION. FOR EXAMPLE, E-2X IS ASSOCIATED WITH V-2; E-4H WITH V-4 ETC. LETTER INDICATES SEQUENCE.

5. 1A, 1B THROUGH 9A ARE TIE POINTS ON R-F CHASSIS. NUMBER IDENTIFIES ASSOCIATED CIRCUIT SECTION, LETTER INDICATES SEQUENCE.

6. UNLESS OTHERWISE SHOWN RESISTORS ARE IN OHMS, CAPACITORS ARE IN UUF.

7. THE FOLLOWING SECTIONS WITHIN CAPACITORS C1-C-101 AND C-17 ARE GANGED:
   C-101 SECTIONS B,D,F,H,J,L
   C-101 SECTIONS B,C,E,G,J,L
   C-17 SECTIONS A,B,C

8. UNLESS OTHERWISE SHOWN, RESISTORS ARE 1/2 WATT.

9. THE FOLLOWING CHART INDICATES THE DIFFERENCES IN COMPONENTS RT-67/GRC MODELS.

REF SYM	1759-PHILA-51	1683I-PHILA-51	1865I-PHILA-49	3211I-PHILA-51
C-20	51			
C-63, C-64	NOT USED			
C-137, C-138	NOT USED			
C-197	NOT USED			
C-199		240	240	
C-303			220, ADDED IN EARLY MODELS. SEE NOTE 13	
C-306	NOT USED	NOT USED IN SERIAL NO. 3994 AND DOWN	NOT USED IN EARLY MODELS	NOT USED IN SOME MODELS
R-5		13	5,100 IN EARLY MODELS	82K IN SERIAL NO 3732 AND UP
R-51				
R-56, R-57		REPLACED WITH COILS L-1A AND L-1S(5.3UH EACH) RESPECTIVELY	REPLACED WITH COILS L-1A AND L-1S(5.3UH EACH) RESPECTIVELY	
R-111			1 MEG	
R-115		180K	180K	180K IN SERIAL NO 13671 AND DOWN
R-143				470K IN SERIAL NO 14940 AND UP
R-175		270K	270K	
R-181		NOT USED SEE NOTE 12	NOT USED SEE NOTE 12	NOT USED SEE NOTE 12
R-184			NOT USED SEE NOTE 11	
R-308			NOT USED IN EARLY MODELS SEE NOTE 13	
R-309		REPLACED WITH A WIRE STRAP	REPLACED WITH A WIRE STRAP	REPLACED WITH A WIRE STRAP IN SERIAL NO 13671 AND DOWN
R-310		NOT USED	NOT USED	NOT USED IN SERIAL NO 13671 AND DOWN

10. IN THE FOLLOWING MODELS, +85 VOLTS IS APPLIED TO THE SCREEN GRID CIRCUIT THROUGH NORMALLY CLOSED CONTACTS 9-10 OF RELAY O-101, TERMINALS 1 OF J-106 AND P-306, AND TERMINALS 9 OF P-304 AND J-4, INSTEAD OF THROUGH TERMINALS 6 OF P-304 AND J-4.

ORDER NO.	SERIAL NO.
1683I-PHILA-51	ALL
1865I-PHILA-49	ALL
3211I-PHILA-51	1-13671

11. IN THE FOLLOWING MODELS, CONTROL VOLTAGE FOR SQUELCH OSCILLATOR V-103 IS OBTAINED ONLY FROM THE GRID, PIN 8 OF FIRST LIMITER V-111, THROUGH RESISTOR R-111. THE CIRCUIT THAT CONNECTS THE GRID, PIN 6 OF SECOND LIMITER V-112, TO THE SQUELCH OSCILLATOR THROUGH RESISTOR R-184 IS NOT USED.

ORDER NO.	SERIAL NO.
1683I-PHILA-51	ALL
1865I-PHILA-49	ALL
3211I-PHILA-51	1-7249

12. IN THE FOLLOWING MODELS, THE CIRCUIT CONTAINING CAPACITOR C-78, THE CONTACTS OF RELAY O-11, TERMINALS 5 OF J-5 AND P-305, TERMINALS 11 OF P-308 AND J-108, AND RESISTOR R-181 IS CONNECTED TO THE JUNCTION OF RESISTORS R-109 AND R-174, INSTEAD OF TO THE GRID, PIN 3 OF V-113. R-181 IS REPLACED WITH A WIRE STRAP.

ORDER NO.	SERIAL NO
1683I-PHILA-51	ALL
1865I-PHILA-49	ALL
3211I-PHILA-51	1-13671

13. IN EARLY MODELS BEARING ORDER NO 1865I-PHILA-49, CRYSTAL RECTIFIER CR-301 IS SUBSTITUTED FOR RESISTOR R-308, AND CAPACITOR C-303 (ADDED), 220 UUF, IS SUBSTITUTED FOR CRYSTAL RECTIFIER CR-301.

14. T-1, T-2, T-6, T-7, T-8 AND T-9 REPRESENT COILS AND ASSOCIATED COMPONENTS MOUNTED IN A MULTISECTION SHIELD COMPARTMENT LOCATED ON THE WIRING SIDE OF THE R-F CHASSIS. THE COILS ARE L-1, L-3, L-12, L-16, L-17, L-18, AND L-22. L-23. ACCESS TO THE COILS AND COMPONENTS CAN BE OBTAINED BY REMOVING A COVER AT THE BOTTOM OF THE R-F CHASSIS.

WING CHART INDICATES THE DIFFERENCES IN COMPONENTS IN RT-63/GRC MODELS.

759-PHILA-51	16817-PHILA-51	16821-PHILA-51	18651-PHILA-49	32114-PHILA-51	32127-PHILA-51
NOT USED				NOT USED	NOT USED
NOT USED				NOT USED	NOT USED
	240 IN SERIAL NO. 9675 AND DOWN	240 IN SERIAL NO. 16667 AND DOWN	240		
NOT USED	NOT USED	NOT USED	NOT USED	2,000 ADDED IN SERIAL NO. 38051 AND UP	NOT USED
			270K		
			18K	18K IN SERIAL NO. 20350 AND UP	18K
				5,100 IN SERIAL NO. 20350 AND UP	5,100
	1 MEG. IN SERIAL NO. 9675 AND DOWN	1 MEG. IN SERIAL NO. 16667 AND DOWN	1 MEG. IN SERIAL NO. 1882 AND DOWN		
	470K IN SERIAL NO. 9675 AND DOWN	470K IN SERIAL NO. 16667 AND DOWN	470K IN SERIAL NO. 1882 AND DOWN		
				5,600 IN SERIAL NO. 20350 AND UP	5,600
	270K IN SERIAL NO. 9675 AND DOWN	270K IN SERIAL NO. 16667 AND DOWN	270K		
	NOT USED IN SERIAL NO. 9675 AND DOWN SEE NOTES 10 AND 11	NOT USED IN SERIAL NO. 16667 AND DOWN SEE NOTES 10 AND 11	NOT USED IN SERIAL NO 1882 AND DOWN SEE NOTES 10 AND 11		

LOWING MODELS, CONTROL VOLTAGE FOR SQUELCH OSCILLATOR V-103 IS OBTAINED ONLY FROM THE GRID, PIN 6 OF FIRST LIMITER
UGH RESISTOR R-111. THE CIRCUIT CONNECTING THE GRID, PIN 6 OF SECOND LIMITER V-112, TO SQUELCH OSCILLATOR THROUGH RESISTOR
T USED.

ORDER NO.	SERIAL NO.
16817-PHILA-51	9675 AND DOWN
16821-PHILA-51	16667 AND DOWN
18651-PHILA-51	1882 AND DOWN

ELS LISTED IN NOTE 10 ABOVE, RESISTOR R-310 IS NOT USED, AND RESISTOR R-309 IS REPLACED WITH A WIRE STRAP.

6, T-7, T-8, AND T-9 REPRESENT COILS AND ASSOCIATED COMPONENTS MOUNTED IN A MULTISECTION SHIELD COMPARTMENT LOCATED
RING SIDE OF THE R-F CHASSIS. THE COILS ARE L-1, L-3, L-12, L-16, L-17 L-18, AND L-22 L-23. ACCESS TO THE COILS AND
S CAN BE OBTAINED BY REMOVING A COVER AT THE BOTTOM OF THE R-F CHASSIS.

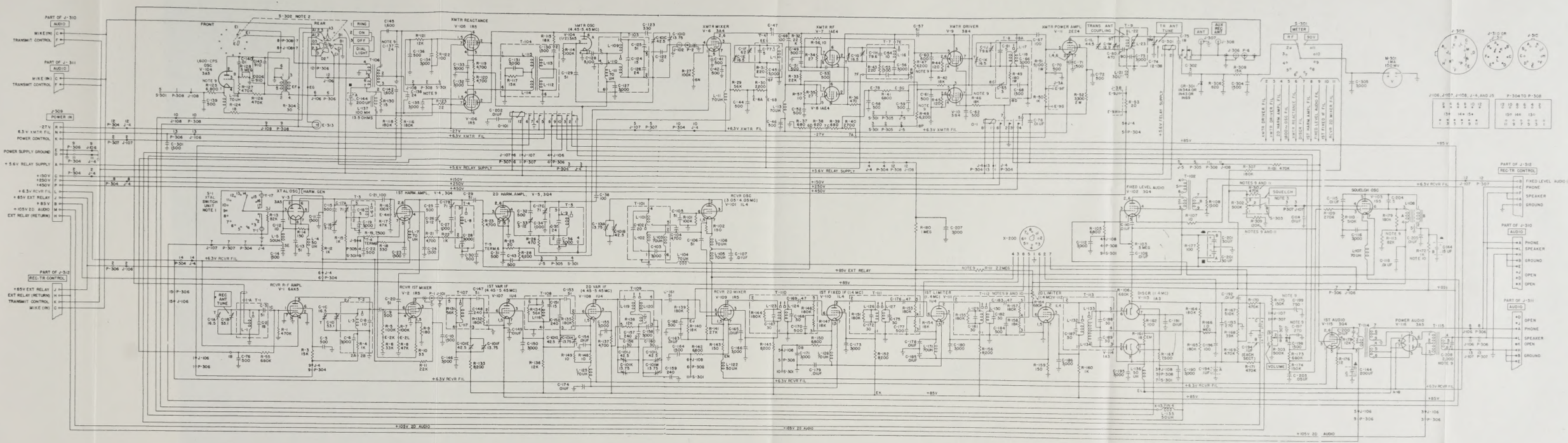

Figure 82.—Receiver-Transmitter RT–68/GRC, main schematic diagram, for all models.

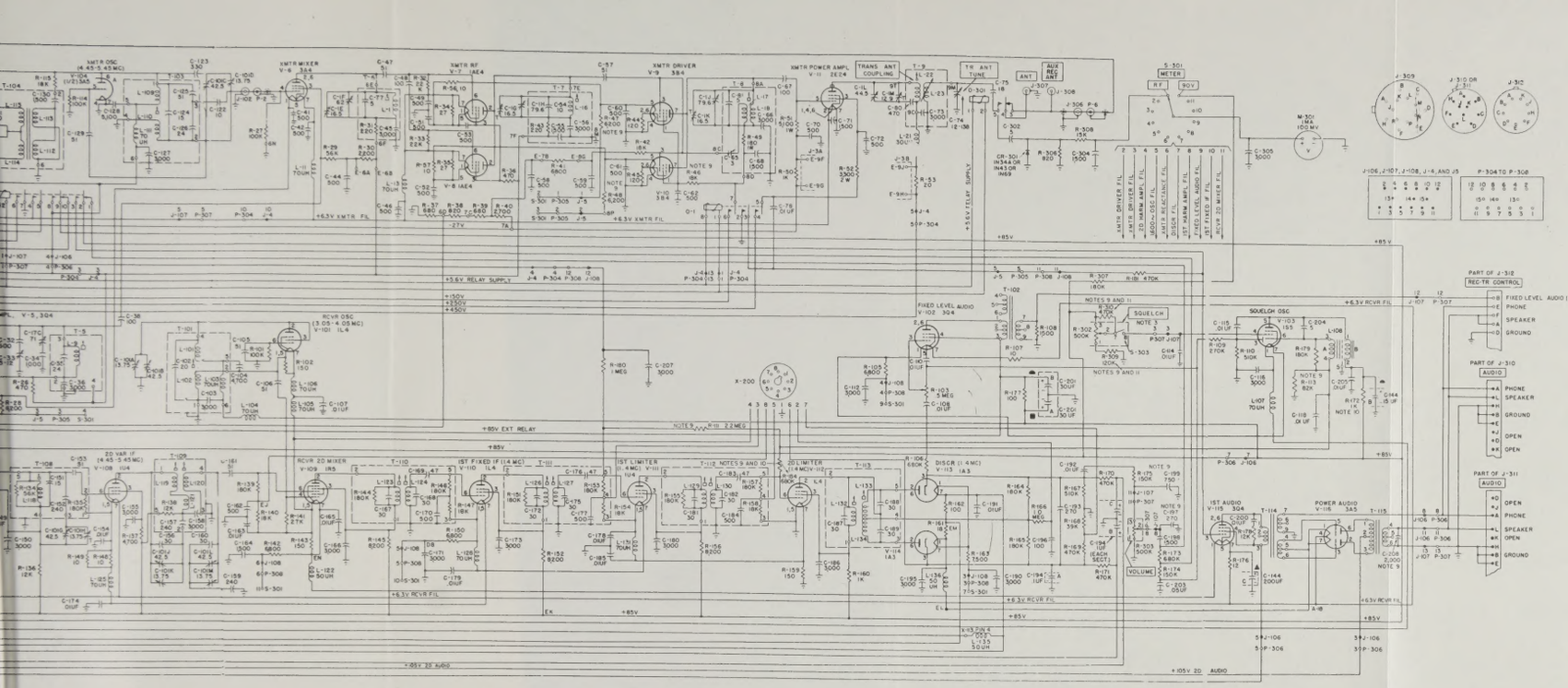

Figure 82.—Receiver-Transmitter RT-68/GRC, main schematic diagram, for all models.

NOTES

1. CRYSTAL SWITCH ASSEMBLY CHART.

XTAL POS NO	XTAL FREQ'S MC
1	8387.500
2	8637.500
3	8887.500
4	6091.666
5	6258.333
6	6425.000
7	6591.666
8	6758.333
9	6925.000
10	7091.666
11	7258.333
12	7425.000
13	7591.666
14	7758.333
15	7925.000
16	8091.666
17	8258.333

2. SWITCH S-302 IS VIEWED FROM PANEL SIDE AND SHOWN IN OFF POSITION. ROTOR SECTIONS ARE DESIGNATED BY LETTERS A, B, C, ETC, AND CONTACTS ARE DESIGNATED BY A LETTER AND A NUMBER. THE LETTER INDICATES THE ROTOR SECTION THROUGH WHICH THE CONTACTS COMPLETE A CIRCUIT; THE NUMBER INDICATES THE SWITCH POSITION IN WHICH THE CONTACT IS IN A COMPLETED CIRCUIT.
3. POTENTIOMETER R-302 IS A DUAL UNIT; ONLY 1 SECTION IS USED IN SOME SETS. R302 IS A SINGLE UNIT.
4. E-2A, E-2L, E-4H, E-6A, E-6B, E-7B, E-8G, E-9H, AND E-9J ARE TEST POINTS. NUMBER IDENTIFIES ASSOCIATED CIRCUIT SECTION. FOR EXAMPLE, E-2K IS ASSOCIATED WITH V-2. E-4H WITH V-4 ETC. LETTER INDICATES SEQUENCE.
5. 1A, 1B THROUGH 9R ARE TIE POINTS ON R-F CHASSIS. NUMBER IDENTIFIES ASSOCIATED CIRCUIT SECTION, LETTER INDICATES SEQUENCE.
6. UNLESS OTHERWISE SHOWN RESISTORS ARE IN OHMS, CAPACITORS ARE IN UUF.
7. THE FOLLOWING SECTIONS IN CAPACITORS C-5, C-10, AND C-17 ARE GANGED.
   C-5, SECTIONS B, D, F, H, & L
   C-10, SECTIONS B, C, E, G, & L
   C-17, SECTIONS A, B, C.
8. UNLESS OTHERWISE SHOWN RESISTORS ARE 1/2 WATT.
9. THE FOLLOWING CHART INDICATES THE DIFFERENCES IN COMPONENTS IN RT-65/GRC MODELS:

REF SYM	7759-PHILA-51	16817-PHILA-51	16821-PHILA-51	18651-PHILA-49	32114-PHILA-51	32127-PHILA-51
C-137 C-138	NOT USED				NOT USED	NOT USED
C-197	NOT USED				NOT USED	NOT USED
C-199		240 IN SERIAL NO 9675 AND DOWN	240 IN SERIAL NO 16667 AND DOWN	240		
C-208	NOT USED	NOT USED	NOT USED	NOT USED	2,000 ADDED IN SERIAL NO 38051 AND UP	NOT USED
R-5				270K		
R-46				18K	18K IN SERIAL NO 20350 AND UP	18K
R-47 R-48					5,100 IN SERIAL NO 20350 AND UP	5,100
R-111		1 MEG IN SERIAL NO 9675 AND DOWN	1 MEG IN SERIAL NO 16667 AND DOWN	1 MEG IN SERIAL NO 1882 AND DOWN		
R-113		470K IN SERIAL NO 9675 AND DOWN	470K IN SERIAL NO 16667 AND DOWN	470K IN SERIAL NO 1882 AND DOWN		
R-125 R-142					5,600 IN SERIAL NO 20350 AND UP	5,600
R-175		270K IN SERIAL NO 9675 AND DOWN	270K IN SERIAL NO 16667 AND DOWN	270K		
R-184 R-309 R-310		NOT USED IN SERIAL NO 9675 AND DOWN SEE NOTES 10 AND 11	NOT USED IN SERIAL NO 16667 AND DOWN SEE NOTES 10 AND 11	NOT USED IN SERIAL NO 1882 AND DOWN SEE NOTES 10 AND 11		

10. IN THE FOLLOWING MODELS, CONTROL VOLTAGE FOR SQUELCH OSCILLATOR V-103 IS OBTAINED ONLY FROM THE GRID, PIN 6 OF FIRST LIMITER V-111, THROUGH RESISTOR R-111. THE CIRCUIT CONNECTING THE GRID, PIN 6 OF SECOND LIMITER V-112, TO SQUELCH OSCILLATOR THROUGH RESISTOR R-184 IS NOT USED.

ORDER NO	SERIAL NO
16817-PHILA-51	9675 AND DOWN
16821-PHILA-51	16667 AND DOWN
18651-PHILA-51	1882 AND DOWN

11. IN THE MODELS LISTED IN NOTE 10 ABOVE, RESISTOR R-310 IS NOT USED, AND RESISTOR R-309 IS REPLACED WITH A WIRE STRAP.
12. T-1, T-2, T-6, T-7, T-8, AND T-9 REPRESENT COILS AND ASSOCIATED COMPONENTS MOUNTED IN A MULTISECTION SHIELD COMPARTMENT LOCATED ON THE WIRING SIDE OF THE R-F CHASSIS. THE COILS ARE: L-1, L-3, L-12, L-16, L-17 L-18, AND L-22 L-23. ACCESS TO THE COILS AND COMPONENTS CAN BE OBTAINED BY REMOVING A COVER AT THE BOTTOM OF THE R-F CHASSIS.